UNIVERSIDADE FEDERAL DA BAHIA

ESCOLA POLITÉCNICA

PROGRAMA DE PÓS-GRADUAÇÃO EM ENGENHARIA INDUSTRIAL

Rua Professor Aristides Novis, nº 02 – Federação – EP/UFBA

CEP 40.210-630 – Salvador - Bahia

Tel: 3283-9800 – Fax: 3283-9800 – e-mail: pei@ufba.br – url: http://www.pei.ufba.br

Entrapment of insulin into nanometric liposomes produced by supercritical CO_2 for oral administration

Islane do Espírito Santo

SALVADOR/BA, JULY 15, 2015.

UNIVERSIDADE FEDERAL DA BAHIA

ESCOLA POLITÉCNICA

PROGRAMA DE PÓS-GRADUAÇÃO EM ENGENHARIA INDUSTRIAL

Rua Professor Aristides Novis, nº 02 – Federação – EP/UFBA

CEP 40.210-630 – Salvador - Bahia

Tel: 3283-9800 – Fax: 3283-9800 – e-mail: pei@ufba.br – url: http://www.pei.ufba.br

Entrapment of insulin into nanometric liposomes produced by supercritical CO_2 for oral administration

Islane do Espírito Santo

Advisors: Elaine Christine de Magalhaes Cabral Albuquerque (PEI/UFBA)
Silvio Alexandre Beisl Vieira de Melo (PEI/UFBA)
Rosana Lopes Fialho (PEI/UFBA)
Ernesto Reverchon (DIN/UNISA)

SALVADOR/BA, JULY 15, 2015.

“You must unlearn what you have learned. (…)

Patience you must have, my young Padawan.”

(Grand Master Yoda)

“I may not be the man I want to be; I may not be the man I ought to be; I may not be the man I could be; I may not be the man I truly can be; but praise God, I’m not the man I once was.”

(Martin Luther King)

Acknowledgements

A PhD thesis is a sum of several efforts, frustrations and achievements that are impossible to handle without the help and support of other people. So, there are several friends and colleagues that I would like to thank for making it possible, including the scientific contribution and/or the attempt to maintain my mental sanity.

First and foremost, I would like to praise and thank the Almighty God who has always guided me through the good and bad times in my life. All of His blessings made me who I am today.

I am forever grateful to my family for all understanding, sacrifices and patience. Words are not enough to express how thankful I am. Special thanks to my beloved husband Rafael Borges, who has always encouraged me throughout this experience. His love and wise attitudes were what sustained me thus far, even when caffeine had lost its effects on my brain.

I would like to deeply acknowledge all of my dear friends, especially Alex Trindade, André São Pedro, Cassia Detoni, Cinara Vasconcelos, Diêgo Madureira, Márcio Silva, Milena Lima, Paula Becerra, Shana Oliveira and Tamara Ângelo. You are the most beautiful present that Science gave me and you cannot imagine how I am honored of that.

In an especial note, I would like to express all my esteem, gratitude and thankfulness to my main advisor, Professor Elaine Albuquerque. I cannot simply acknowledge her support. I must thank her for all friendship, patience and for not giving up on me. Her example of commitment and dedication makes her a role model to be followed.

I wish also to thank my advisors Professor Silvio Vieira de Melo and Professor Rosana Fialho, and to my “non-official” advisor Professor Gloria Meyberg. Your advice on this research has been invaluable.

My sincere and special appreciation and gratitude to Professor Ernesto Reverchon and his team – Giovanna Della Porta, Iolanda De Marco, Mariarosa Scognamiglio, Renata Adami and Stefano Cardea. Your cooperation was essential in this thesis.

My especial thanks to my Supercritical Lab-mates Roberta Campardelli (+ Dario Palumbo), Sara Liparoti, Marco Menillo, Valentina Prosapio, Giuseppe Salvo, Miguel Meneses, Massimiliano Morelli, Francesco Cice, Francesco Glielmi, Lucia Baldino, Petra Ševčíková, Maria Elena Sellitti, Emilia Oleandro, Maxime Defour, Maxime Cherain and Giovanni Rago. Without you, this work would not be possible to be performed and the lab-time would not be as nice as it was. Please, always remember that *“Il dottorato nuoce a te e a chi ti sta intorno”*!

Finally, I would like to thank Brazilian National Institutes of Science and Technology (CNPq foundation – grant number 146886/2010-0, CNPq/INCT – Nanobiofar Project and CAPES foundation – grant number 5780-11-0) for the financial support.

Content

Index of Abbreviations

BSA: Bovine serum albumine

CO_2: Carbon dioxide

DHA: Docosahexaenoic acid

DCM: Dichloromethane

DESAM: Depressurization of an Expanded Solution into Aqueous Media

DRV: Dried-reconstituted or dehydrated-rehydrated vesicles

EE: Encapsulation efficiency

EPA: Eicosapentaenoic acid

FESEM: Field emission scanning electron microscopy

FID: Flame ionization detector

FITC-dextran: Fluorescein isothiocyanate-dextran

GAS: Supercritical gas antisolvent process

GC: Gas chromatography

GMP: Good manufacturing processes

GRAS: Generally recognized as safe

HPLC: High performance liquid chromatography

L/G: Liquid to gas ratio

LUV: Large unilamellar vesicles

MCP: Mixture critical point

MLV: Multilamellar vesicles

PA: Phosphatidic acid

PAA: Polyacrilic acid

P_C: Critical Pressure

PC: Phosphatidylcholine

PG: Phosphatidylglycerol

PE: Phosphatidyl ethanolamine

PEG: Polyethylene glycol

PEG-2000: Poly(ethyethylene glycol)-2000 stearate

PLA: Poly(lactic acid)

PLGA: Poly(lactic-co-glycolic acid)

PS: Phosphatidylserine

PSD: Particles size distribution

PVA: Polyvinyl alcohol

RESS: Rapid expansion of supercritical solution technique

SAPA: *p*-succinylamidophenyl α-L-arabinopyranoside

SAPG: *p*-succinylamidophenyl α-D-glucopyranoside

SAPM: *p*-succinylamidophenyl α-D-mannopyranoside

SAS: Supercritical antisolvent technique

SEE: Supercritical emulsion extraction

SEE-C: Continuous supercritical emulsion extraction

SEM: Scanning Electron Microscopy

SFE: Supercritical fluid extraction

$scCO_2$: Supercritical carbon dioxide

scRPE: Supercritical Reverse Phase Evaporation

SLN: Solid lipid nanoparticles

SuperLip: Supercritical Assisted Liposome formation

SUV: Small unilamellar vesicles

T_C: Critical temperature

TEM: Transmission electronic microscopy

TFA: Trifluoroacetic acid

TSZnPc: Zinc phthalocyanine tetrasulfonic acid

USP: United States Pharmacopeia

VLE: Vapor-liquid equilibrium

WHO: World Health Organization

W/O: water-in-oil

W/O/W: water-in-oil-in-water

Index of Figures

Index of Tables

Abstract

Diabetes mellitus is a serious metabolic disorder resulted from defects in insulin action, insulin secretion or both of these reasons. The most used treatment for this disease is the subcutaneous administration of insulin. However, chronic administration of this protein may cause some secondary effects, such as lipoatrophy and lipohypertrophy. Furthermore, when the peptide is administrated subcutaneously, all the tissues in the human body will be exposed to an equal concentration of insulin, leading to liver overload. So, there is a need to produce controlled release systems that can deliver the insulin to its target, enhancing the effectiveness of the treatment. One of the controlled release system that can be utilized is liposomes. Comparing with other vectors, they are considered the safest ones in drug delivery. In addition, liposomes can minimize side effects of drugs, protect them from degradation. However, conventional techniques for liposomes production possess some disadvantages, as the utilization of a large amount of organic solvent in the beginning or during the process and it can remain traces of organic solvent in the formulation. In addition, several steps are necessary to produce the vesicles, which difficult the scale-up for industrial liposome production. So, two new continuous supercritical assisted processes are proposed. The aims of these techniques are (i) produce liposomes of controlled submicrometric size using a new continuous supercritical process, and (ii) remove the organic solvent from the bulk of liposome suspension using supercritical solvent extraction. Results demonstrated that both techniques are suitable for liposome processing and that they are efficient techniques for liposome processing.

Furthermore, stable liposomes were formed after the both supercritical CO_2 methods.

Key-words: liposomes, supercritical CO_2, superlip, solvent elimination

Resumo

O diabetes mellitus é uma desordem metabólica grave resultante das falhas da ação e/ou secreção de insulina. O tratamento mais utilizado para essa enfermidade é a administração subcutânea de insulina. Entretanto, a administração crônica dessa proteína pode causar alguns efeitos adversos, como lipoatrofia e lipohipertrofia. Além disso, quando esse peptídeo é administrado utilizando a via subcutânea, todos os tecidos corpóreos serão expostos a uma concentração igual de insulina, podendo acarretar em uma sobrecarga hepática. Então, ha a necessidade de produzir sistemas de liberação controlada que possam vetorizar a insulina a suas células alvo, aumentando a eficácia do tratamento. Um dos sistemas de liberação controlada que pode ser utilizado são os lipossomas. Lipossomas têm sido utilizados como veículos farmacêuticos devido a sua capacidade de melhorar a atividade e a segurança de moléculas terapêuticas. Comparado com outros vetores, os lipossomas são considerados o sistema de liberação controlada mais seguro. Alem disso, os lipossomas podem minimizar os efeitos adversos de medicamentos e também protegê-los contra degradação. Contudo, as técnicas convencionais de produção de lipossomas possuem algumas desvantagens, como utilização de grandes quantidades de solventes orgânicos no inicio e/ou durante o processo, sendo que certa quantidade de solvente pode ainda permanecer na formulação. Ademais, diversas etapas são necessárias para produzir os lipossomas, o que dificulta o *scale-up* para a produção industrial. Logo, duas novas técnicas continuas utilizando fluido supercrítico foram propostas. Os objetivos dessas técnicas são (i) produzir lipossomas com

tamanho submicrométrico controlado utilizando um novo processo supercrítico continuo, e (ii) remover o solvente residual da suspensão lipossomal utilizando uma extração supercrítica. Os resultados demonstraram que ambas as técnicas foram adequadas para o processamento dos lipossomas. Lipossomas estáveis foram formados apos os dois métodos supercríticos.

Palavras-chave: liposomas, CO_2 supercritico, superlip, eliminação de solventes.

1. Introduction

In recent years, biopharmaceutical drugs, including therapeutic proteins and peptides, have been the target of intense investigation by the pharmaceutical industry and independent research centers. One of these biomolecules is insulin, daily administered via injection for the treatment of *diabetes mellitus*, which causes discomfort and provides lower quality of life for patients. Despite the various proposals and alternatives found in scientific literature, the oral route is the most attractive because of its convenience and acceptability.

Although the bioavailability of insulin after oral administration is generally low due to enzymatic degradation suffering of the gastrointestinal tract, low stability at gastric pH and the physical barrier constituted by the intestinal epithelium, its absorption by the gastrointestinal tract simulates its endogenous path, suffering hepatic first passage metabolism. One of the most promising options that increase the gastrointestinal absorption of proteins such as insulin goes through its encapsulation in nanoparticle systems, such as liposomes. These systems represent devices that mimic the structure and function in cells, and its benefits have been demonstrated in several application areas, especially in medical and cosmetic industries, reflecting the large number of scientific papers, patents and some commercial products.

These particles are composed of phospholipid molecules arranged in bilayers that allows the association of hydrophilic compounds in nature, hydrophobic and amphiphilic, both inside and along the bilayer. Moreover, they interact with cells in a unique way and may have its surface modified by compounds which may be isolated or associated with other structures. Conventional methods of liposome production are usually multi-steps and/or can leave a high amount of solvent residue in the preparation, such as thin lipid film

and ethanol injection respectively. This last method – ethanol injection – is one of the few methodologies of liposome production that is possible to scale up.

There are several techniques for scaling-nanoparticles, such as microfluidization and supercritical production. Previous studies in the literature show that nanoparticles produced by supercritical technology are more uniform in terms of morphology and size distribution. Another advantage of the production of nanoparticles using supercritical fluid is the elimination of multi-stage, since they may be produced in a single step, without toxic organic solvent. Liposomes have been also produced by supercritical technology. Several works demonstrate that it is feasible to produce micrometric liposomes using different supercritical processes. However there is no study demonstrating the production of coating liposomes and/or liposomes entrapping water soluble substances with high encapsulation efficiency using supercritical technology.

This thesis is divided into 10 chapters, including this introduction. The aim of the study is described in Chapter 2, while the review of literature is divided in three chapters (parts 3 – 5) for a better understanding of the topic.

Briefly, Chapter 3 describes diabetes mellitus that is an endocrine disease that affects the control of glucose levels in the blood. The most used treatment for diabetes is insulin administration. Treatments that were developed and/or studied in order to overcome the drawbacks related to insulin administration, including the researches performed using liposomes as an alternative of vehicle for insulin, are reported in Chapter 4. In Chapter 5, pharmaceutical processing using supercritical fluids are reported, as well as liposome production using supercritical fluids.

Obtained results of this work and their discussions are presented in this thesis in scientific paper format. A summary of the articles are described in Chapter

6, while the proper articles are reported in Chapter 7. Succinctly, there are 3 scientific papers in Chapter 7: one related to supercritical fluid solvent extraction, one related to supercritical processing of liposomes, and the last one related to encapsulation of bioactive proteins and biopolymer cover of liposomes using supercritical fluid.

A summary of the reached conclusions and outline topics for future works are described in Chapters 8 and 9, respectively; and the list of references used during this thesis is reported in Chapter 10.

2. Aim of the study

The overall objective of these studies is to evaluate the production of liposomes of controlled submicrometric size encapsulating insulin using a new continuous supercritical fluid process, named Supercritical Assisted Liposome formation (SuperLip).

Different strategies were taken to obtain nanometric liposomes produced in a single-step process. Experiments have been performed varying process operating parameters like pressure, temperature and flow rate ratio between CO_2 and ethanol, producing liposomes of different size and distribution. The results demonstrated that atomized liquid droplets are transformed efficiently into liposomes as a consequence of the spontaneous organization of the vesicles on the fly in the high pressure vessel.

Furthermore, the evaluation of the removal of residual organic solvent from the bulk of liposome suspension, prepared by ethanol injection, utilizing a high pressure continuous packed tower based on SEE-C technique is another objective of these studies.

To achieve this purpose, the influence of pressure, temperature, phospholipid concentration and liquid-to-gas ratio (L/G) were analyzed. The variations of these parameters were made in order to optimize the process conditions and to apply this technique, for the first time, for liposome processing.

3. Review of Literature - Insulin and diabetes mellitus

3.1 Therapeutic proteins

The cells produce a large diversity of macromolecules that serve as structural components, hormones, receptors, biocatalysts and so on. These macromolecules can be proteins, polysaccharides or nucleic acids, and they are constructed of monomers units. In the case of proteins, these monomers are called α-amino acids, which are joined together by the formation of peptide bonds. The types of amino acids present and the way that they are linked together in the polypeptide chain determine the dimensional structure and the biological properties of the peptide or protein (Whitford, 2005); Williams and Lemke (2002).

In humans, peptides and proteins have several biological activities as growth, production of hormones, water balance, enzymatic catalysts, sexual reproduction, glucose metabolism, etc. However, therapeutic proteins are produced in small quantities by the human body and usually have their local of action close to the production site (Williams and Lemke, 2002). So, genetic and environmental factors can trigger dysfunction in protein metabolism and functions. Some peptides or proteins already represent a significant portion of medication used in clinical practice such as insulin used medically to treat some forms of diabetes mellitus. That therapeutic peptide has been under intense investigation by the pharmaceutical industry and research centers.

3.2 Insulin

Insulin is a polypeptide hormone formed by two chains, A and B, which contains 21 and 30 amino acids respectively connected by disulfide bonds, as can been seen in Figure 3.1. Separately, each chain is biologically inactive

(Silva et al., 2003). Insulin is synthesized into the pancreatic islet cells (islets of Langerhans) from a single chain precursor of 110 amino acids named preproinsulin. After undergoing translocation through the membrane of rough endoplasmic reticulum, the 24-amino-acid N-terminal signal of the B chain of preproinsulin is cleavaged, forming proinsulin (Brunton et al., 2006). Then proinsulin folds, forming the disulfide bonds. Therein, four basic amino acids and the connecting peptide are removed by proteolytic cleavage in Golgi complex, converting proinsulin to insulin (Brunton et al., 2006; Williams and Lemke, 2002).

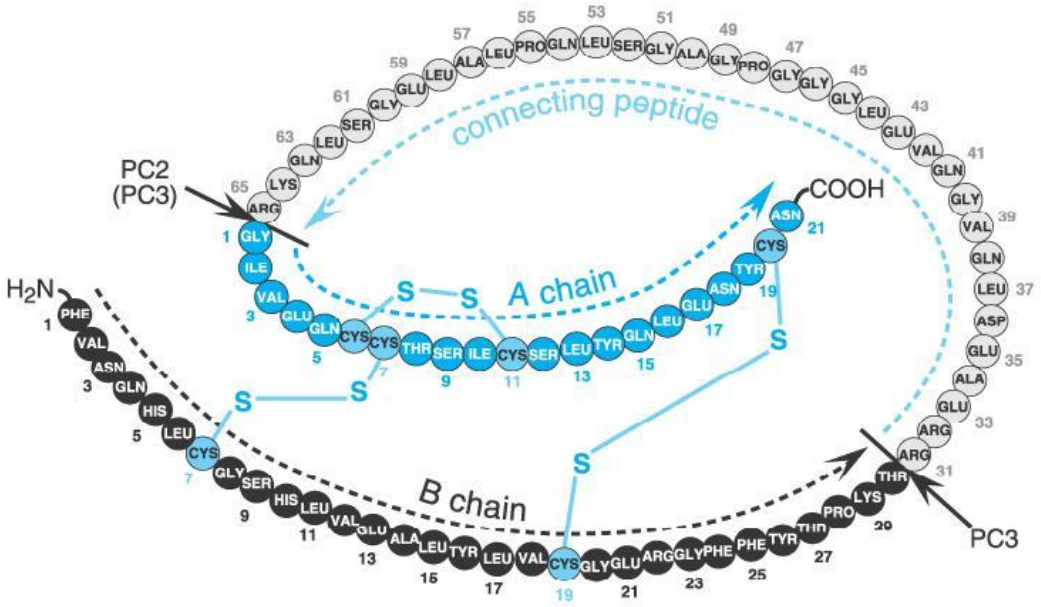

Figure 3.2 - The conversion of human proinsulin to insulin (Brunton et al., 2006).

Although the amino acid sequence of insulin has been conserved in evolution, significant variations that account for differences in biological activity and immunogenicity occurred (Meyts, 1994). There is one single gene, forming one simple protein in most species, except rats and mice. These animals have two genes that encode insulin and synthesize two products that differ at two

amino acids residues in the B chain (Brunton et al., 2006; Williams and Lemke, 2002).

Studies of structure-activity relationship of insulin from several species and from modification of the molecule have been made to obtain information about the protein. In most case, the affinity of insulin for insulin receptor correlates with its potency for eliciting physiological effects on glucose metabolism. Human, bovine and porcine insulins are equipotent (Brunton et al., 2006). Because of this fact, pharmaceutical industry began to commercialize bovine and porcine insulins in the 1920s and for the next 60 years animal-based insulin was the basis of diabetes treatment. With genetic engineering development in the 1970s, insulin passed to be synthesized using recombinant DNA technology and nowadays this is the form that this protein is most commercialized (Williams and Lemke, 2002).

The insulin protein is the active form of the hormone found in plasma. In solution, insulin can be found as a monomer, dimer or hexamer. The zinc-associated hexameric structure is the form that insulin is stored in pancreas and only the monomer of insulin is capable of interact with insulin receptor (Brunton et al., 2006; Silva et al., 2003). Native insulin exists as monomer, which is the active form of the hormone, in low physiological concentrations (<0.1 μM) and insulin dimerizes at higher concentrations (0.6 μM) found in pharmaceutical preparations. Hexamers form even in absence of zinc ion at concentrations greater than 0.2 mM (Chien, 1996; Silva et al., 2003). Both forms are depicted in Figure 3.2.

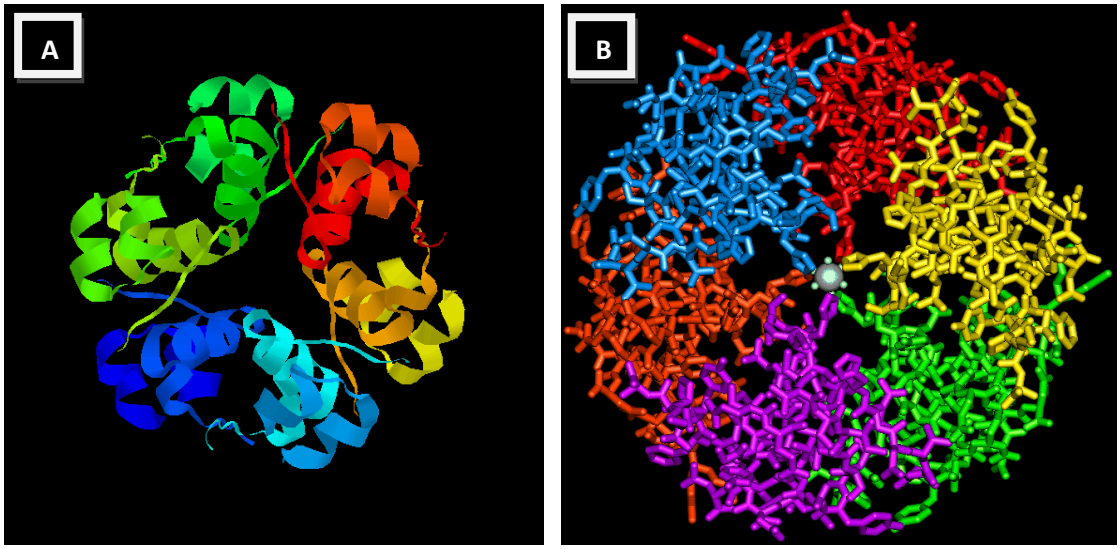

Figure 3.2 - Insulin hexamer viewed by (A) ribbon rendition and (B) the 3-fold axis, which indicates the position of zinc ions (Gill et al., 1997).

The important target tissue of insulin regulation of glucose homeostasis is liver, muscles and fat, but it also exerts regulatory effects on other types of cells as well. Insulin is one of the hormones that are responsible of controlling the uptake, use and storage of cellular nutrients, as well as the suppression of hepatic glucose production. The anabolic actions of insulin are related to the stimulation of intracellular use and storage of glucose, fatty acids and amino acids, while it also inhibits catabolic actions such like breakdown of glycogen, fat and protein (Adamo et al., 1998; Brunton et al., 2006; Könner et al., 2009; Williams and Lemke, 2002).

The importance of insulin in the control of the concentration of glucose in blood is such that any decrease in the release of this hormone, there is a tendency to raise the glucose levels in blood. This hyperglycaemia can be the key part of the syndrome of diabetes mellitus (Carino and Mathiowitz, 1999; Könner et al., 2009; Woods et al., 1985).

3.3 Diabetes mellitus

Diabetes mellitus is a metabolic disorder of multiple aetiology resulted from defects in insulin action, insulin secretion or both that affect more than 170 million of global population in the year 2000. The estimative for the year 2030 is that this number will rise from 170 million to 360 million suffers of this disease. This deficiency of insulin causes changes in the entire metabolic pattern of individuals with this illness. Patients with diabetes often demonstrate elevated blood glucose levels (chronic hyperglycaemia), excess glucose in the urine and failure to properly metabolize fat, carbohydrate and protein (Brunton et al., 2006; Sih, 2008; WHO, 1999; Williams and Lemke, 2002).

The usual symptoms of diabetes mellitus are thirsty, polyuria, blurring of vision and weight loss. In the severe forms, patients may present ketoacidosis or a non-ketotic hyperosmolar state, which can develop and lead to stupor, coma and death. Frequently, the symptoms are not so severe or there is an absence of them, which leads to a delay in the diagnosis of this pathology, resulting in the aggravation of functional changes caused by hyperglycaemia (WHO, 1999, 2003).

The classification of diabetes was made according to aetiological types. Type 1 is related to the pancreatic islet cells destruction, usually by the immune system, which may lead the use of insulin for the survivor of the patient. Type 2 is described by the deficiency of insulin secretion and/or insulin action. Other specific types of this pathology are gestational one and diabetes caused by genetic defect or diseases in the pancreas (WHO, 1999, 2003).

The regular therapeutic treatment of diabetes type 1 is injection of insulin subcutaneously. The chronic subcutaneous administration of insulin can cause

secondary effects as lipoatrophy and lipohypertrophy in the locals that the injections are done, worsen by the discomfort caused to the patients (Chien, 1996; Ramkissoon-Ganorkar et al., 1999). On the other hand, insulin is physiological excreted to the pancreatic vein to be directly transported to the liver, where almost half of the particles are degraded and taken off the hepatic circulation (Ramkissoon-Ganorkar et al., 1999; Silva et al., 2003).

When insulin is administrated through injection, it goes to the blood circulation. When this situation happens, all tissues are exposed to an equal concentration of this protein, which implies that the liver receives only a part of the injected doses and that muscles and adipose tissues react to the injected dose without liver control of the insulin present in the plasma. The excessive exposure of veins and muscles to insulin can cause hyperstimulation of metabolism, associated with diabetes side effects, such as the production and emission of contrainsulin hormones, which may cause deterioration in health status of the diabetic patient (Carino and Mathiowitz, 1999; Kisel et al., 2001; Saffran et al., 1997; Silva et al., 2003).

Taking the aforementioned into consideration, there was a need to develop methods of insulin administration that could lead the drug directly to its site of action, decreasing the appearance of side effects and the discomfort of the patients. Several approaches have been made to modify insulin structure and to associate this protein with diverse types of delivery systems, which can be polymeric or lipid, to enhance the effectiveness of the treatment of diabetes.

4. Review of Literature - Improvement on insulin therapy

4.1 State of the art in improvement on insulin therapy

The most physiological pathway for insulin administration is the oral route, because the peptide is absorbed in the intestines, which mimetizes the natural course of insulin metabolism. An oral insulin formulation would have the advantage of decrease the discomfort of the patient, the number of injections and its associated side effects. It would result in a greater patient compliance to the treatment and in a reduction of morbidity and mortality associated with this disease. However, the oral route of administration is complicated to realize because less than 0.5% of the dose is absorbed and insulin can be degraded by proteases presented in the alimentary canal, such as trypsin, elastase, □-chymotripsin and brush-border membrane bound enzymes in a lesser extent (Hashimoto et al., 2000; Khafagy et al., 2007; Kisel et al., 2001; Saffran et al., 1986; Sarmento, 2007; Trotta et al., 2005).

Another barrier to oral insulin administration is the low enterocyte permeability. Paracellular (passage of substances between cells) and transcellular (transfer of compounds throught the cell) routes have received much attention recently for protein and peptide absorption. It is known that the paracellular route has limited protein absorption because of low surface area and the presence of tight junctions in the intercellular spaces. So, approaches have been investigated in order to modify the intestinal wall and modulate the tight junctions associated with the paracellular route (Carino and Mathiowitz, 1999; Salamat-Miller and Johnston, 2005), such as a research that related that some compounds present mucoadhesive properties. Such properties promote a rise in gastrointestinal transit time and in efficiency, widening or even opening the tight junctions (Pan et al., 2002).

Orally particles can be absorbed via transcellular pathway, but in small quantities, as can been noticed in Figure 3.1. This absorption can occur not only through the membranous epithelial cells (M-cells) of the Peyer's patches in gut-associated lymphoid tissue, but also in other gut enterocytes. It is important to point that intestinal epithelium is composed by different types of cell and structure, but it is mainly constituted by enterocytes and goblet cells. Enterocytes control the passage of macromolecules and pathogens and allow the absorption of nutrients from dietary nutrition; while goblet cells are responsible of mucus secretion (Rieux et al., 2006).

The uptake of nanoparticles associated with proteins by enterocytes is a potential process, but it is still limited. Since M-cells are capable of transport a wide range of compounds, including nanoparticles, they are the potential portal for oral drug delivery. Furthermore, some strategies in order to improve the uptake of these particles such as the administration of cationic nanoparticles. Positively-charged compounds can bind with the negatively-charged mucous layer, increasing the absorption rate of the peptide-loaded nanoparticles (Rieux et al., 2006). Thus it is preferential to utilize them on nanoparticles membrane composition or on particle coating.

The greatest obstacle to the development of a successful oral protein administration is the fabrication methods of the formulations. Any kind of disruption in the protein disruption, being it primary (amino acid sequence), secondary (two-dimentional substructure), tertiary (folding) or quaternary (peptide subunits union) can deactivate the protein. Slightest changes in the environment in which the protein is can modify the protein stability. These

modifications can be pH, temperature, solvent, presence of other compounds and so on (Carino and Mathiowitz, 1999).

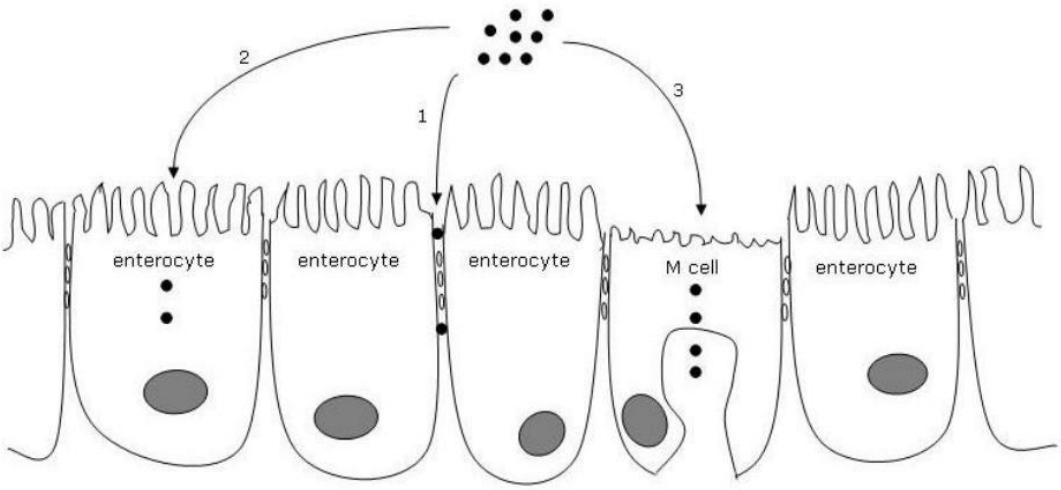

Figure 4.6– Schematic representation of possible mechanisms of intestinal absorption: 1. Paracellular route through tigh junctions; 2. Transcellular route; 3. M-cells of Peyer's patches route (Sarmento, 2007).

The development of a successful oral delivery system for insulin depends on the biological barriers that are present in the gastrointestinal tract and on physicochemical characteristics of the protein (Sarmento, 2007). Because of this, several researches have been made aiming the improvement of the physicochemical characteristics of this peptide and also the association of insulin with particulated systems.

4.2 Insulin stabilization, absorption enhancers and enzyme inhibitors

In order to promote the creation of an oral formulation for insulin administration, it has been chemically modified and/or utilized with absorption enhancers to improve its intestinal absorption. There is also the possibility of co-administration of an enzyme inhibitor or the utilization of carriers to increase the

resistance of enzymatic degradation , enabling the creation of this type of formulation (Hashimoto et al., 2000).

Authors and co-workers modified insulin with the monosaccharides *p*-succinylamidophenyl α-D-glucopyranoside (SAPG), *p*-succinylamidophenyl α-D-mannopyranoside (SAPM), *p*-succinylamidophenyl α-L-arabinopyranoside (SAPA), transforming the peptide into a glycosylated insulin. These forms of insulin showed satisfactory hypoglycemic effect according to the following order: SAPG > SAPM > SAPA. It happened probably due to the increasing resistance of insulin to enzymatic degradation (Haga et al., 1990; Hashimoto et al., 2000).

Baudys *et al.* (1995) synthesized glycosylated insulin with SAPG and evaluated the immunogenicity in mice because of the possible clinical application of this type of insulin. It was shown that monosubstituted derivatives had similar immunological response comparing to human insulin, while disubstituted ones showed elevated responses. However, the affinity of the glycosylated insulin for the insulin receptor was unchanged, which caused the maintenance of blood glucose level similar to the one caused by the regular peptide.

Another approach in insulin therapy is the utilization of absorption enhancers, which can improve the absorption of this peptide by increasing the cellular transport (Khafagy et al., 2007). A study of bile salts and micellar systems with insulin suggested that the mixture of these compounds increased the insulin permeation (Lane et al., 2005). Another interesting study showed that the incorporation of docosahexaenoic acid (DHA) or eicosapentaenoic acid (EPA) in water-in-oil-in-water multiple emulsions can enhance intestine absorption of insulin (Morishita et al., 2000; Morishita et al., 1998).

The use of absorption enhancers is limited because once cell membranes become more permeabilized, not only the peptide will be transported but also undesirable molecules that can be present in the gastrointestinal tract (Khafagy et al., 2007). Taking this into consideration, some researchers have been made in attempt of overcome this drawback.

The co-administration of enzyme inhibitors slows the rate of insulin degradation and can provide a suitable media for the delivery of peptide and protein drugs (Khafagy et al., 2007). Yamamoto *et al.* (1994) studied the effect of five enzyme inhibitors on the intestinal absorption of insulin *in vivo*. Among these, three showed good results in absorption of insulin in large intestine and none showed any kind of effect in small intestine probably because of the amount of enzymes secreted in this area.

Another study conjugated polymers with enzyme inhibitors in order to prevent the degradation of insulin from proteases. It has shown good protection *in vitro* against trypsin, α-chymotrypsin and elastase, which are the main proteases that inactivate insulin (Marschütz and Bernkop-Schnürch, 2000). However, the utilization of enzyme inhibitors can have an effect on absorption of other peptides and proteins that would normally be degraded. In addition, the modification of the protein degradation pattern can cause a metabolic disturb in the gastrointestinal tract. Furthermore, the utilization of enzyme inhibitors seems to be questionable because of the number of side effects associated to the co-administration of these molecules, such as systemic intoxication, hypertrophy and hyperplasia of the pancreas (Khafagy et al., 2007; Marschütz and Bernkop-Schnürch, 2000). A promising strategy of solution to the

aforementioned problems is the encapsulation of insulin in drug delivery systems.

4.3 Encapsulation technology

Other strategy to improve orally proteins and peptides absorption is to associate them with particulated systems. Thus, the proteins will be protected and they can be delivered direct to their local of action, favoring the treatment. Some of these associations are listed below.

4.3.1 Polimeric particles

Polymeric micro- and nanoparticles are solid particles ranging in size from 1 μm to 1000 μm and 10 nm to 1000 nm, respectively. They can be described as matrix systems in which the active principle is dissolved, dispersed or entrapped into (Kreuter, 1996). Some of the most utilized polymers in drug delivery system and proteins are poly(lactic-co-glycolic acid) (PLGA), poly(lactic acid) (PLA), chitosan, alginate and hyaluronan, also known as hyaluronic acid (Jorgensen et al., 2006; Zhang et al., 2011).

An interesting research utilized PLGA as microcapsules matrix aiming the encapsulation of insulin. In this study, the initial burst release of insulin-loaded PLGA microcapsules was controlled with addition of deionized water, ethanol or glycerol in the dicloromethane dispersion of the double emulsion. *In vitro* release of microcapsules without any hydrophilic compounds had a quick initial burst around 40%. The addition of water turned the initial burst less effective than the last one, but the release rate became slower with time. However, the addition of glycerol and/or ethanol released only 10% in the

beginning time. The addition of hydrophilic solvents to dichloromethane may produce amphiphilic properties to insulin, which facilitates the transit of this peptide through the liquids. The authors suggested that this behavior may increase the stabilization of the internal phase of the emulsion and may favor the localization of insulin on the interface between the hydrophilic solvent and the dichloromethane, forming more stable particles and avoiding the existence of the peptide on the polymer surface (Yamaguchi et al., 2002).

Ibrahim *et al.* (2005) studied the stability of insulin during the erosion of microspheres made of PLA and PLGA. It was observed that 30% and 25% of the initial amount of insulin was maintained inside PLA and PLGA microspheres respectively and the stability study was realized with this quantity. After analysis, it was shown that a considerable part of insulin had undergone structural changes. However, *in vitro* or *in vivo* experiments were not made to verify the maintenance or the loss of biological activity.

In order to protect insulin against inactivation in the gastrointestinal tract and to ensure the gut uptake of the particles containing this peptide, Jederstrom *et al.* (2004) utilized hyaluronan as an insulin carrier. According to the authors, this polymer has been documented as a safe compound. To improve the oral bioavailability of insulin, the molecule size was reduced and the hydrophobic/lypophilic balanced was adjusted. Because of these modifications and the association with hyaluronan, insulin hexamer did not present zinc attached to it. However, *in vivo* studies showed that the insulin-hyaluronan complex was able to reduce the blood glucose levels.

Alginate and chitosan, natural polysaccharides, have been also extensively used in polymeric particles due to their characteristics such as

biocompatibility, biodegrability and mucoadhesion. The chitosan-alginate mixture reduces the porosity of alginate beads, decreasing the leakeage of encapsulated drugs. This can occur because electrostatic interactions between the carboxyl groups of alginate with the amino groups of chitosan, forming an alginate-chitosan complex. Also, this formed complex has a pH-sensitivity that reduces the release of macromolecules in low pH, favoring the utilization of chitosan-alginate complex as oral delivery vehicle (Amidi et al., 2010; Hari et al., 1996; Hejazi and Amiji, 2003; Lueβen et al., 1997; Zhang et al., 2011).

Although some results obtained from the association of insulin and polymeric particles are good, there is still a gap in understanding the effects of the accumulation of these polymers can cause in the human body. Because of this, several authors decided to study particles that are made of lipids that are present in the human body.

4.3.2 Solid lipid nanoparticles

Solid lipid nanoparticles (SLN) have been developed very recently. SLN are composed of a solid lipid core that may contain glycerides mixtures, triglycerides or even waxes that are solid at room temperature and also at human body temperature (Martins et al., 2007; Wissing et al., 2004). The fact that they have a hydrophobic core provides a proper medium for entrapment of lipophilic drugs, because they will disperse properly due to their miscibility with the lipid matrix. On the other hand, hydrophilic drugs are thermodynamically immiscible with the matrix, which may cause the expulsion of the drug from the lipid core (Puri et al., 2009; Wissing et al., 2004).

Liu *et al.* (2008) produced SLN entrapping insulin aiming the administration via pulmonary route through nebulization of the nanosuspension. Insulin associated to SLN showed similar hypoglycemic effect as insulin in PBS buffer in rats, but the first presented administration period between doses much longer than the second. *In vivo* and *in vitro* tests showed no pronounced cytotoxicity and no lipid deposition on pulmonary alveoli. Sarmento *et al.* (2007) also produced insulin-loaded SLN, but the oral route of administration was chosen to deliver the peptide to fasted diabetic rats. To make a comparison, insulin solution and empty SLN were also administrated orally. The hypoglycemic effect of the insulin associated to SLN occurred in a biphasic way, probably due to the initial burst followed of a prolonged release from SLN.

García-Fuentes *et al.* (2002) studied the stability of lipid particles entrapping insulin in simulated gastrointestinal medium aiming the oral route of administration. SLN made of tripalmitin were coated with L-α-lecithin or poly(ethyethylene glycol)-2000 stearate (PEG-2000). Lipid particles coated and non-coated were added to acidic, neutral and basic media. In the acidic medium, the non-coated particles had a high tendency to aggregation, differently from the coated SLN. This behavior was not observed in the other media, which suggests that SLN can aggregate in a gastric media. In the simulated intestinal medium, coated and non-coated lipid particles had different behaviors: the coated SLN had a slight size reduction, while the coated particles had an increase in size. These behaviors may be explained by the fact that the partial or total detachment of coating and electrolytes can destabilize lipid particles, respectively (Zimmermann and Müller, 2001).

Although many research groups have been working in association of insulin and SLN, these type of lipid particles have several disadvantages, such as low drug loading capacity because of the formation of a perfect lipid crystal matrix; the presence of alternative colloidal structures in the aqueous dispersion, such as micelles, liposomes, drug nanocrystals; the possibility of problems during storage and administration like particle size increase, drug expulsion; and the modification of the equilibrium between the colloidal species and the physical state of the lipids during the dilution or water removal (Martins et al., 2007; Mehnert and Mäder, 2001; Wissing et al., 2004).

4.3.3 Liposomes

In recent years, liposomes have been extensively studied as a carrier that can improve activity and safety of therapeutic molecules. They are considered, in comparison with other vectors, the safest vectors for drug delivery. They also have the ability of minimize side effects of drugs, protect them from degradation, specific targeting and biocompatibility. These lipid vesicles are colloidal associations of amphiphilic lipids that organize themselves spontaneously in bilayer vesicles as result of unfavorable interactions between phospholipids and water. A schematic representation of liposomes is depicted in Figure 4.2. As they have lipophilic and hydrophilic portions, liposomes can entrap substances with varying lipophilicities in the phospholipid bilayer, in the aqueous compartment or either at the bilayer interface (Imura et al., 2003; Jones, 1995; Joshi and Müller, 2009; Lesoin et al., 2010b; Mohanraj et al., 2010; Sharma and Sharma, 1997) which can modify physicochemical properties and enhance the biological activity of the compounds (Gortzi et al., 2007).

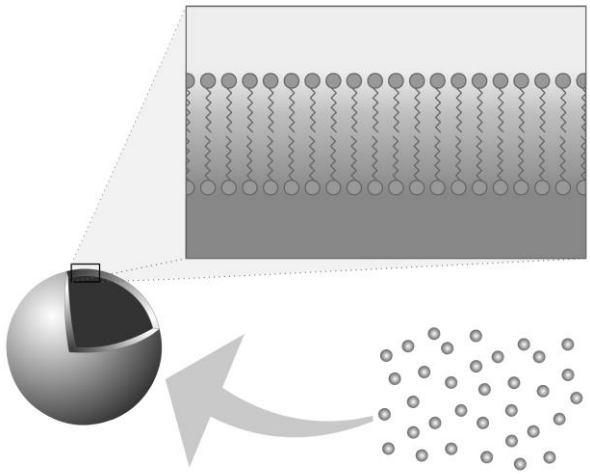

Figure 4.7 – Schematic representation of liposomes bilayer membrane.

As liposomes are composed by phospholipids, they have interesting physical and chemical properties, such as osmotic activity, permeability of their membranes to different solutes and also the capacity of interaction with the membranes of different cell types (Lasic, 1993). The most common phospholipid used in liposome preparations is phosphatidylcholine (PC), a neutral charged lipid, also called lecithin, which its headgroup is demonstrated in Figure 4.3. PC molecules are zwitterionic at physiological pH. They are not soluble in water and, in aqueous media, they align themselves tail-to-tail in planar bilayer sheets aiming the minimization of not favorable interactions between the long hydrocarbon fatty acid chains and the aqueous phase. These interactions are eliminated when the sheets fold on themselves to form closed vesicles (New, 1990; Tabbakhian, 1998).

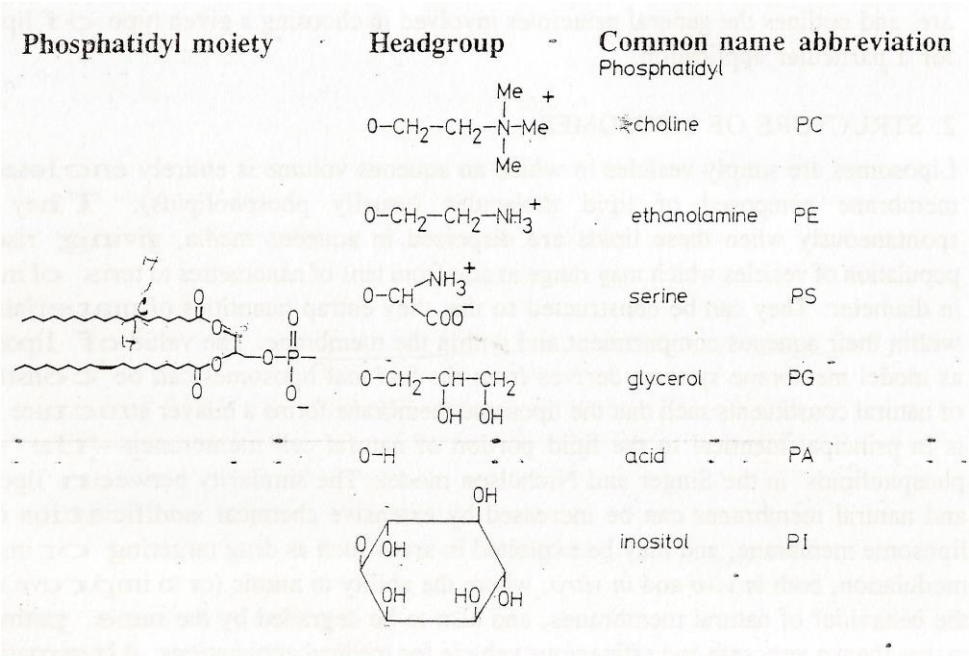

Figure 4.8 – Chemical structure of the some common phospholipids (New, 1990).

Another example of a zwitterionic phospholipid found in natural membranes is phosphatidyl ethanolamine (PE), also known as kephalines. Differently from PC, PE molecules cannot fold on themselves to form closed vesicles without addition of another compound (Cabral-Albuquerque, 2005; Lasic, 1993; New, 1990; Tabbakhian, 1998)

Charged phospholipids can be utilized to produce cationic or anionic liposomes. For example, phosphatidylglycerol (PG), phosphatidylserine (PS) or phosphatidic acid (PA) can be utilized to provide negatively charged lipid vesicles. And, also, sterols can be utilized in liposomes constitutions to modify permeability and fluidity properties of the vesicles. Cholesterol is the most common sterol that is utilized because it can stabilize liposomal membranes depending on its concentration (New, 1990; Tabbakhian, 1998).

The combination of diverse lipid molecules can provide several dispositions of the phases. These dispositions are demonstrated in Figure 4.4.

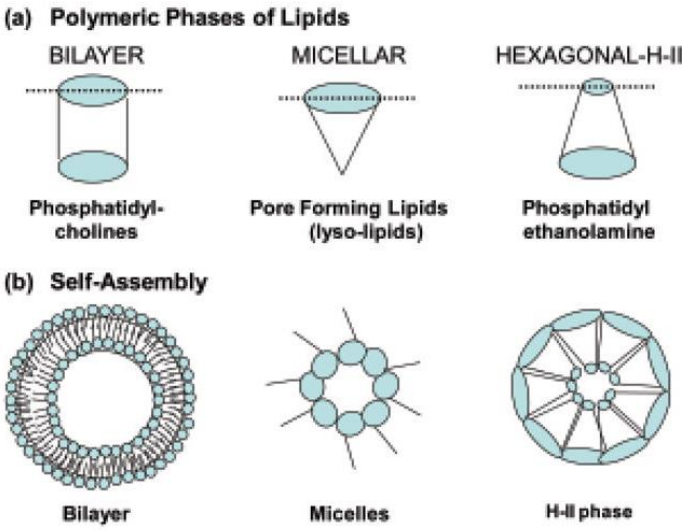

Figure 4.9 – Combination of diverse lipid molecules. Depending on the chemical structure, the lipids can adopt different disposition. (a) Polymeric phases of lipids (PC – bilayers: lyso-PC – micellar; PE – hexagonal). (b) Membrane self-assembly of the respective lipids (Puri et al., 2009).

3.3.3.1 Physical structure of liposomes

Liposomes are usually classified according to their size, but they can also be characterized by their shape and chemical composition. They can range in size from 25nm to 1000nm or greater. They can also be found as a single bilayer membrane or be composed of multiple concentric membrane lamellae (Cabral-Albuquerque, 2005; Lasic, 1993; New, 1990; Santos and Castanho, 2002).

It is usual to define liposomes in categories such as:

(a) Multilamellar vesicles (MLV) – these are vesicles consisted of several concentric lamellae and are the simplest type of liposome to prepare. They usually are vesicles with wide range of size (100 to 1000nm) (Lasic, 1993; New, 1990; Santos and Castanho, 2002).

(b) Large unilamellar vesicles (LUV) – these liposomes present only one lamella and have diameters nearby 100nm (New, 1990; Santos and Castanho, 2002).

(c) Small unilamellar vesicles (SUV) – these vesicles are usually the lowest possible size for phospholipid vesicles and they require a high energy input for their production. Their size depends on, basically, of the lipid composition of the membrane and the ionic strenght of the aqueous medium. Because of this, they are more thermodynamically unstable than the other types and are more susceptible to aggregation and fusion (New, 1990; Santos and Castanho, 2002; Tabbakhian, 1998).

Those categories are also demonstrated in Figure 4.5.

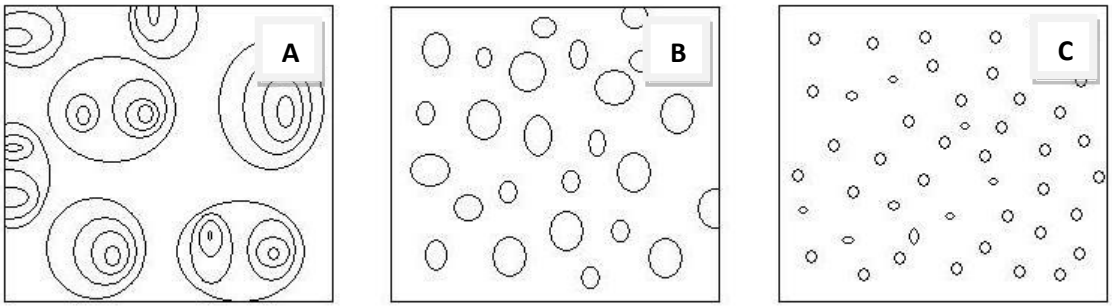

Figure 4.10 – Schematic representation of different physical structure of liposomes: (A) MLV, (B) LUV and (C) SUV.

The similarity between liposomes and natural membranes can be increased by chemical modifications of their membranes. According to chemical composition, liposomes can be classified as:

(a) Conventional liposomes – these are vesicles that have on their composition phospholipids with or without cholesterol. It is important

to point that these phospholipids can be neutral or negatively charged. They can vary in vesicle size, lipid composition, number of bilayers and surface charge (Storm and Crommelin, 1998).

(b) Immunoliposomes – these type of liposomes has antibodies or fragments of antibodies attached to the membrane surface aiming the improvement of site binding and drug targeting (Cabral-Albuquerque, 2005; Storm and Crommelin, 1998).

(c) Sterically stabilized liposomes or stealth® - these are also known as long-circulating liposomes because of they can persist for long periods of time in the bloodstream. The most usual way of produce these liposomes is to attach polyethylene glycol (PEG) to their surfaces. The addition of highly hydrated PEG groups to the liposomes surfaces creates a steric barrier that reduces the interactions of the lipid vesicles with the component present in biological media (Cabral-Albuquerque, 2005; Storm and Crommelin, 1998).

(d) Cationic liposomes – generally utilized for genetic material delivery, they are composed by cationic phospholipids that interact with the DNA, forming a lipid-DNA complex. This complex is capable of promote protection, cellular internalization and/or expression of the nucleic acid sequences (Storm and Crommelin, 1998).

In general, most methods of preparation of liposomes give a heterogeneous population of vesicles with a large distribution of sizes.

4.3.3.2 Preparation of liposomes

Liposomes were first made by Bangham (1963), that identified the potential use of these kind of vesicles and recognized some of their characteristics, such as the ability of entrapping solutes and part of the solvent, the osmotic activity and the different permeability properties to molecules and ions (Bangham, 1963; Lasic, 1993). After that, several studies with different methods of preparation to prepare liposomes with different size distribution, morphology, encapsulation efficiency, etc., started to appear.

The selection of the method of production of liposomes is related to the materials or the lipid composition of the vesicles that will be used. The starting point for all the conventional methods of liposomes production is the dissolution of phospholipids in an organic solvent. This stage is necessary to ensure complete and homogeneous mixing of all components required in the liposome preparation. In these methods, lipophilic compounds must be incorporated to the organic solution, while the hydrophilic compounds must be added to the aqueous solution (Alves, 2003; New, 1990).

Most of the conventional methods of making liposomes involves some basic stages: drying down of lipids from organic solvents, dispersion of the lipid layer in aqueous media, homongenization and analysis of the formed suspension. The main difference between these methods is the way in which the lipid membrane is dispersed in aqueous media (Alves, 2003; Lasic, 1993; New, 1990). In the next paragraphs, the most common methods of production of liposomes will be presented.

(a) Mechanical dispersion/Thin film hydration methods

These are the simplest methods of produce liposomes. Usually, the lipids are dried down from organic phase onto a solid support. The thin lipid film formed is dispersed by addition of aqueous phase and then shaken. After hydration, the lipids “swell” and come off the support in sheets, forming usually MLV. To produce smaller and slightly more homogeneous liposomes, it is necessary to prolong the shaking and make it in a vigorous way (Lasic, 1993; New, 1990).

Different variations of this method have been developed and they can differ in organic solvent utilized, addition of some inert gas, mode of drying lipids and parameters of agitation, such as temperature, time, intensity and mode. These variations affect the heterogeneity of populations of the formed vesicles (Lasic, 1993; New, 1990).

Usually, the encapsulation efficiency of water-soluble compounds is not high. On the other hand, lipid-soluble compounds can be entrapped with almost 100% efficiency (New, 1990). Some of the basic methods of thin-film hydration and size reduction methods are described below.

(i) Hand-shaken multilamellar vesicles

This is the simplest and the most widely used method of mechanical dispersion of liposomes. It is commonly known as hand-shaking since the lipids are suspended up from the solid support by gentle manual agitation. Aiming the increase of entrapment efficiency, it is recommended to use a round-sided

vessel, because the lipids will be dried down onto a largest possible area to form a very thin lipid film (Alves, 2003; New, 1990).

In this method, the temperature for drying down should be regulated to above the phase transition temperature of the lipids utilized. At high temperatures or in conditions that the dried lipid forms a thick film, usually under the phase transition temperature, it may be difficult to remove the lipids from the support and the distribution of solute throughout the bilayer can be uneven (New, 1990). In addition, a thin lipid film is required because it facilitates the hydration of the bilayers, making this part of the process more efficient (Skoza and Papahadjopoulos, 1980).

(ii) Pro-liposomes

In this method, the lipids are dried onto a finely divided particulate support, such as some polysaccharide like sorbitol or powdered sodium chloride. While the water is added with mixing to the dried thin lipid film, the lipids swell as the support is dissolved, giving a suspension of MLV in aqueous media (New, 1990).

The size and heterogeneity of the produced liposomes are influenced by particle size of the carrier. MLV produced by this method seem to be smaller the liposomes produced by conventional hand-shaken method. Lipid vesicles are formed more quickly and with a higher amount of smaller vesicles by this method because the water has more access to the lipid to form the pro-liposomes than when they are dried onto a support (New, 1990).

A large amount of pro-liposomes can be prepared and dryed before use. This method can be useful for commercial applications, especially in food

applications. It can also overcome storage problems in liquid, dry or frozen form. However, this method is more suitable to encapsulate lipid-soluble compounds than water-soluble compounds (New, 1990).

(iii) Freeze-drying

Freeze-dry the lipid dissolved in an organic solvent is an alternative method of dispersing the lipid in a finely-divided form before contact with aqueous media. To choose the organic solvent, it is important to know its freezing point, which needs to be above the temperature of the condenser of the freeze-drying. After obtaining the lipid in dry form, the aqueous solution can be added with rapid agitation above the phase transition temperature to form MLV (New, 1990).

(iv) Membrane extrusion

An optional method to reduce the size of lipid vesicles is to pass them through a membrane filter of defined pore size utilizing high pressure and temperature above the phase transition temperature of phospholipids. After several passages through the membrane, the size of the liposomal population will be reduced to a size distribution around the pore size and the liposomal suspension becomes more unilamellar (Alves, 2003; New, 1990)

(v) Sonicated vesicles

Aiming the reduction of lipid vesicles size, it is necessary to use a method which transmits energy in a high level to the suspension. There are two manners of transmit this energy by sonication: using a probe or a bath

ultrasonic desintegrator. The probe is employed for suspensions which require high energy in a small volume. The bath is utilized for large volumes of lipid suspension. The vesicles obtained by this method are smaller than the vesicles obtained by membrane extrusion. However, this kind of homogenization technique can cause degradation of the lipids resulting from the high temperatures (Alves, 2003; Lasic, 1993).

(vi) French press extrusion

One of the first techniques of fragmentation and restructuring of membranes under mild conditions is the french press. The liposomes produced by this method are more stable than sonicated ones because of their range of sizes that can be from 30 to 80 nm in diameter. To produce unilamellar liposomes by this method, the MLV suspension is forced by pressures up to 25000 psi to pass through an orifice. To decrease the size heterogeneity, multiple extrusions of liposomes have to be made. The higher the pressure and the slower the flow rate, the smaller the liposomes (Alves, 2003; Lasic, 1993; New, 1990; Skoza and Papahadjopoulos, 1980).

(vii) Dried-reconstituted or dehydrated-rehydrated vesicles (DRV)

This is another method that the solid lipid is dispersed in finely divided form before contact with the aqueous. It is a combination of classic method of liposomes preparation, size homogenization, drying and rehydration. But, in this case, instead of drying the lipids from an organic solution, a lipid vesicle suspension is dehydrated. Dehydration can be made by freeze-, air- or spray-drying. Furthermore, the rehydration utilizes less amounts of water than from

which it was dried (Alves, 2003; Cabral-Albuquerque, 2005; Lasic, 1993; New, 1990).

The liposome-dried lipid is organized into membrane structures, which can rehydrate to form vesicles with high entrapping efficiency. This can happen because the water has access to the dried vesicle instead of the thin lipid film and a small volume is needed to re-suspend a large amount of lipid. Water soluble compounds can be added to the liposomal suspension and dried together with the vesicles, which increases the entrapping efficiency of these types of molecules. However, the removal of water bilayer that surrounds the lipid vesicles during the dehydration may facilitate the aggregation of liposomes, which is the biggest disadvantage of this method (Alves, 2003; Cabral-Albuquerque, 2005; New, 1990).

(b) Injection methods

In this class of methods, the lipids are first dissolved in an organic solvent and then dropped in an aqueous solution containing the compounds to be entrapped. The organic solvents utilized can be miscible or immiscible with the aqueous phase. When the organic solvent is immiscible with the water, one of the phases has to be in large excess (Lasic, 1993).

(i) Ethanol injection

An ethanol solution of lipids is rapidly dropped into an aqueous medium through a needle. The ethanol is diluted in the water and the phospholipids are dispersed throughout the medium. If the mixing is not carefully enough, aggregates and large vesicles can be generated. This method has the

advantage of simplicity; however the difficulty of removing ethanol from the phospholipids membrane is a serious drawback (Alves, 2003; New, 1990; Skoza and Papahadjopoulos, 1980).

(ii) Ether injection

This method is very similar with the ethanol injection in concept, but it has some differences with the last one. The injection of an immiscible solvent in an aqueous medium occurs in a very slowly velocity through a needle in a temperature that the organic solvent can be vaporized during the process. The major disadvantage of this method is the long time that it takes to produce liposomes, since the non-evaporated ether has to be removed by dialysis or gel filtration (Lasic, 1993; New, 1990; Skoza and Papahadjopoulos, 1980).

(c) Demulsification methods

Similarly to the injection methods, the lipid is introduced from an organic medium to an aqueous medium. However, the organic phase is not quickly removed, but, as it is immiscible with water, it forms water-in-oil (w/o) emulsions or double emulsions (w/o/w). There are some variations that can also form o/w or o/w/o microemulsions (Lasic, 1993).

Demulsification methods are utilized when it is necessary to produce liposomes with a high entrapping efficiency. The most popular technique in this class of methods is the reverse phase evaporation (Lasic, 1993).

(i) Reverse phase evaporation

This technique is one of the most utilized to produce lipid vesicles in liposome research because of its high entrapping efficiency. The phospholipids are dissolved first in organic solvents and then the aqueous phase is added into that latter phase. The organic solvents are removed under reduced pressure, forming a gel-like intermediate phase that spontaneously forms liposome dispersion when the organic solvent is removed. The vesicles formed are large unilamellar liposomes and have a diameter in order of 500 nm. In addition, high entrapping efficiency in the aqueous phase can be achieved (Lasic, 1993; Skoza and Papahadjopoulos, 1980).

4.3.3.3 Surface-modified liposomes

Conventional liposomes are quickly taken up after administration from the bloodstream by the mononuclear phagocytic system. Because of this, some approaches have been made to prolong the period of blood circulation of liposomes, reducing the immunological uptake. In addition, conventional liposomes do not have the ability of deliver compounds to certain target cells. One of these efforts was to cover the liposome surfaces with polymers. So, liposome surfaces have been modified with the purpose of enhance *in vitro* and *in vivo* stability and/or the ability to deliver drugs to specific cells (Tabbakhian, 1998).

Some possible approaches to modify the surface of lipid vesicles via surface coating with polymers are listed below.

(a) Coating liposomes with polymer adsorption through hydrophilic and/or ionic interaction – the coating of liposomes with polymers is performed usually by incubating the liposome suspension with a

polymer solution. An advantage of this method is that liposomes can be coated by polymers which do not present some specific functional group. However the utilization of organic solvent in the coating process makes it undesirable for medical and pharmaceutical applications. This is the most utilized method of coating liposomes (Tabbakhian, 1998).

(b) Coating liposomes via salt formation – polymers that have opposite charges of liposomal surface can autopolymerizate with the negatively charged lipids, forming salts. The inconvenience of removing the unreacted polymers because of their toxicity is, probably, the major disadvantage of this technique (Tabbakhian, 1998).

(c) Coating liposomes by polymers bearing hydrophilic anchor group – polymers which have hydrophobic anchors such like CH can be sustained within the outermost surface of liposomal bilayers, stabilizing the vesicle surface, making it stronger and controlling the diffusion of compounds trough the lipid chains (Tabbakhian, 1998).

4.3.3.4 Liposomes and insulin

Several studies have been made with the association of insulin and liposomes aiming the decrease of blood glucose concentration. One of the first works realized associating this protein and these lipid vesicles administrated this formulation in albino rats (Wistar) orally and compared with the intraperitonial route. The blood glucose level was reduced by one-third of the initial value after orally administration of insulin associated with liposomes. This

result was corresponding with the administration of the same dose of the peptide with liposomes intraperitonially. The same amount of free insulin was administrated via both routes and it was observed that the oral administration did not reduce significantly the blood glucose level comparing with the intraperitonial route (Patel and Ryman, 1976). This behavior was mentioned before and can be explained because of the presence of enzymes that can degrade the insulin throughout the gastrointestinal tract.

After this study, many others were carried out in order to obtain successful and effective formulations for administration of insulin entrapped into liposomes. An example of that is a research realized by Kisel *et al.* (2001) that encapsulated porcine insulin into liposomes and tested their effectiveness in diabetic rats. The oral administration of insulin entrapped in liposomes composed of phosphatidylethanol and phosphatidylcholine (PE:PC 1:1) caused an increase in the blood levels of immunoreactive insulin. The blood level of insulin reached a peak in less than 2 hours and its high level was sustained for a period of 3.5 hours. After the increasing of immunoreactive insulin in blood levels, a decrease in blood glucose levels was detected. To make a comparison, the same doses of free insulin with empty liposomes were administrated and neither changes in the levels of immunoreactive insulin, nor in blood glucose levels were detected.

However, the results of insulin uptake encapsulated in conventional liposomes were note satisfactory. Instability of liposomes in the gastrointestinal tract prompted the development of new formulations that are more stable against acids and bile salts. One of the strategies adopted was coating the lipid vesicles with mucoadhesive polymers, such like chitosan, carbopol, methyl

cellulose, polyvinyl alcohol having a long alkyl chain (PVA-R) and polyacrilic acid having a cholesteril group (PAA) (Degim et al., 2006; Shaji and Patole, 2008; Silva et al., 2003; Takeuchi et al., 2003). Since the muchoadhesion increases the residential time at the absorption sites, it is expected an increase in drug absorption due to a combination of mucoadhesive properties and the drug delivery system (Degim et al., 2006).

Chitosan and its derivatives are important compounds for enhance the absorption of proteins for the epithelial barriers because of the mucoadhesive properties. As a result of this, particulated system that have on the formulation this polysaccharide can have intensified interactions with epithelial cell membrane and/or mucus, amplified residence time on the site of action and protection of labile proteins from enzymatic degradation (Amidi et al., 2010).

Takeuchi *et al.* (1996) developed mucoadhesive liposomal forms aiming the intestinal absorption. Three mucoadhesive polymers: chitosan, poly(acrylic acid) and polyvinyl alcohol were utilized to coat liposomes. Mucoadhesion tests were realized using intestines from Wistar rats and it was shown that the adhesive amount of coated liposomes was high comparing to non-coated vesicles. Comparing only the mucoadhesive results of the polymers, chitosan presented the highest values of adhesive percentage than the others. It can be explained because chitosan is a cationic polymer and can interact though ionic forces with the mucosa.

Iwanaga *et al.* (1999) evaluated the effects of surface-coated liposomes on the oral absorption of insulin. To do it, liposomes made of DPPC and cholesterol were coated with a sugar chain of mucin or poly(ethylene glycol) 2000 (PEG-2000). Non-coated vesicles were utilized as control. Non-coated

liposomes were administrated orally in rats and it presented rapid transit through the gastrointestinal tract, showing that the vesicles and the intestinal wall presented weak interactions. The coated-liposomes presented different behavior from the non-coated and from each other. Mucin-coated liposomes were retained in the stomach, while liposomes coated with PEG-2000 were retained in the small intestine because of the strong interactions between intestinal mucosa and the polymer that enhanced the hypoglycemic effects of insulin. So the last recovering polymer is more effective to oral delivery of insulin than the first.

Degim *et al.* (2006) prepared liposomes by dry lipid film method. The membrane of those liposomes was constituted by DPPC, cholesterol and methyl cellulose. Methyl cellulose acts like mucoadhesive agent, since it maintains insulin for a longer period of time in the cell surface. Liposomes with insulin were tested by oral administration of the product in rats and the results were compared to a tablet formulation containing insulin into phospholipid micelles. Both formulations reduced blood glucose level after 60 minutes, presenting quite similar results.

Another strategy adopted to deliver insulin to the intestinal layer was to conjugate drugs with lectins. Lectins are proteins that are able to recognize and interact with sugar complexes present in proteins and lipids in cell membranes. In the gastrointestinal tract, most cell surface present binding sites for lectins (Zhang et al., 2005). Because of this, Zhang *et al.* (2005) bound lectins to PE and then incubated with insulin liposomes prepared by reverse-phase evaporation technique. The lectin-modified liposomes were in contact with buffer media to simulate the gastrointestinal environment and it was shown that

the modified vesicle protected the peptide against enzymatic digestion. Then, these liposomes were tested in rats to verify the capability of reducing blood glucose levels. The results showed that, after the oral administration, the serum insulin concentration decreased, while hypoglycemic effects were not observed in conventional liposomes with statistical significance.

There are also several studies that are trying to develop non-invasive formulations for insulin delivery than orally. Table 4.1 presents some of these studies.

Table 4.2 – Lipid insulin formulations for non-invasive administration.

Administration Route	**Application and Model**	**Observation**	**References**
Buccal	*In vivo*/rabbits	Blood glucose level was still low 10h after administration.	(Yang et al., 2002)
Buccal	*In vivo*/rats	The administration of insulin via buccal did not present significant therapeutic effect.	(al-Achi and Greenwood, 1993)
Nasal and ocular	*In vivo*/rats	Nasal route showed better results on decreasing blood glucose level then the ocular.	(Jain et al., 2007)
Oral	*In vivo*/rats	The hypoglycemic effect of insulin-liposomes double coating was higher that non-coated liposomes.	(Wu et al., 2004)
Pulmonary	*In vitro*/type II epithelial cell	The incorporation of insulin in liposomes facilitated the peptide uptake by the cells.	(Mitra et al., 2001)
Pulmonary	*In vivo*/rats	This is the first report of *in vivo* modified release of insulin post-inhaled.	(Karathanasis et al., 2006)

Pulmonary	*In vivo*/mice	There was no virulent effect nor inflammation or imunnoreaction on the lungs.	(Huang and Wang, 2006)
Pulmonary	*In vivo*/rats	Insulin delivery through epithelial cell space in mucosa.	(Chono et al., 2009)

All these liposomes were prepared utilizing one of the conventional methods mentioned before. These methods have some drawbacks in common: several steps are necessary to produce the vesicles, the utilization of a large amount of organic solvent in the beginning or during the process and it can remain traces of organic solvent in the formulation (Lesoin et al., 2011d). To overcome this drawback, the utilization of supercritical fluid to produce nanoparticles have been under evaluation.

5. Review of Literature - Supercritical fluids and pharmaceuticals processing

5.1 Supercritical fluids

Nowadays, the utilization of supercritical fluid based technology is considered as a promising substitute to the traditional methods, since it is an efficient and environmental-friendly technique. Supercritical fluids are those which are highly dense and non-condensable at pressure and temperature higher than the critical values. In addition, some authors consider that the density of the fluid must be, at least, near to the critical density in order to consider it a true supercritical fluid (Cardoso, 2008; Daar and Poliakoff, 1999; Otake et al., 2001). Beyond this point, the liquid and gas phases becomes indistinguishable because the density of the phases are identical, existing only a homogeneous medium (Foster et al., 2003; Pasquali and Bettini, 2008; Villiers et al., 2009).

In the supercritical region, depicted in Figure 4.1, the physical-chemical characteristics of the fluid are intermediate between the liquid and the gas. Beyond the critical point, the surface tension and the separation between liquid and gas phases in equilibrium no longer exist, forming a single supercritical phase without apparent phase separation and macroscopic aspect of homogeneous and opalescent system. Supercritical fluids have, like gas, higher viscosity and high diffusivity comparing with liquids; and the density value of these fluids is high enough to make them capable of solvate other molecules, like liquid (Antunes, 2007; Brunner, 1994b; Frederiksen et al., 1997; Majerik, 2006; Mukhopadhyay, 2000; Pasquali and Bettini, 2008).

Solubility of a solute in a solvent is related to intermolecular forces between the molecules. This interaction of solute and solvent molecules occurs by the approximation of the molecules, so it depends on the solvent density. It is

well known that supercritical fluids have a high dissolving power in states that they have high density. Then it is not difficult to accept that the solvent power property of a supercritical fluid, which is close to the liquid state, can be manipulated by changes in pressure at constant temperature. Supercritical fluids have, also, transfers properties between gas and liquid because of parameters as viscosity, thermal conductivity and diffusivity which contribute to their unique characteristics and provide to these fluids the capability of mass transfer (Antunes, 2007; Cardoso, 2008; Reverchon and Adami, 2006; York et al., 2004).

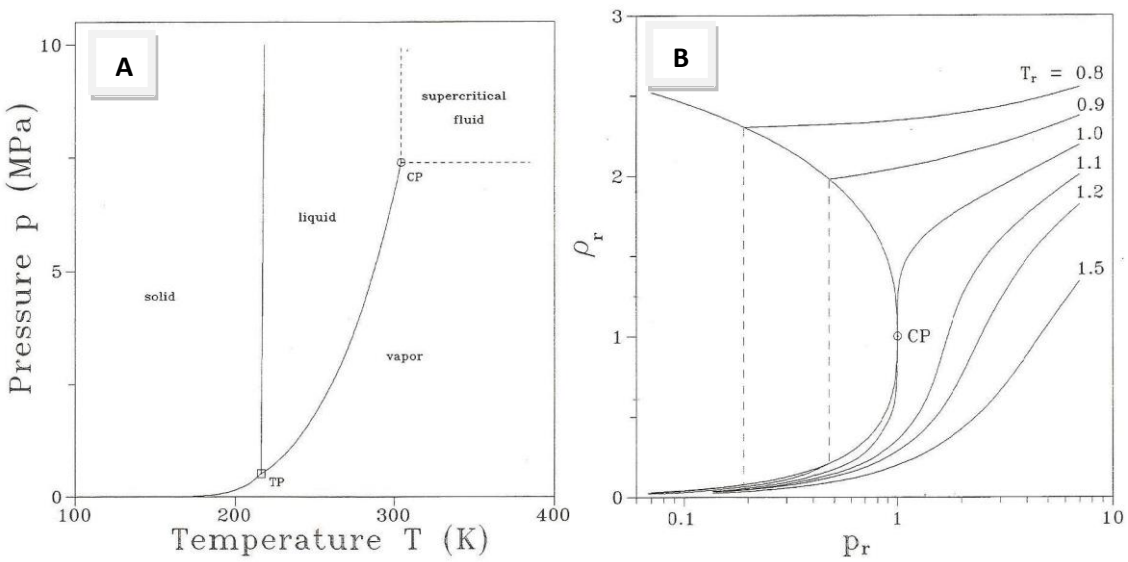

Figure 5.1 – CO_2 phase diagrams: (A) pressure vs. temperature and (B) density vs. pressure (Staby, 1993).

Analyzing the phase diagram of density vs. pressure showed in Figure 5.1, it can be noticed that, for temperatures near to critical temperatures, slight pressure modifications cause great density modifications, which do not happen with very high temperatures. The same behavior happens with pressures near to the critical pressures. So, near to the critical point, the density of the fluid is

sensitive with slight changes in temperature and pressure (Antunes, 2007; Pasquali and Bettini, 2008).

The density fluctuation can be explained by characteristics that these fluids have when the microscopic level is taken into account. In this scale, these fluids can be described as extremely inhomogeneous and most of their characteristics are provided from this inhomogeneous structure, such as solute solvation, reactivity, selectivity and density modification, which is an evidence of lack of uniform distribution of molecules of the fluids in a determinate space. The organization of the molecules in the supercritical fluids is dynamic and the density modification can explain the possibility of compression that these fluids have (Nishikawa et al., 2004; Nishikawa and Morita, 1998, 2000; Pasquali and Bettini, 2008).

Supercritical fluids have many industrial applications, including chemical reactions, extraction of essential oils, supercritical chromatography, manufacturing of semiconductors, micronization of pharmaceutical excipients, production of drug delivery systems and so on (Majerik, 2006; Yeo and Kiran, 2005).

The most widely used supercritical fluid in drug delivery applications is carbon dioxide (CO_2) because of its low critical parameters (T_c= 31.1ºC, P_c=73.8 bar). CO_2 is also inexpensive, non-toxic, non-flammable, non-corrosive, available in abundance at a high purity and has high solvating power property near to the critical point (Davies et al., 2008; Foster et al., 2003; Manosroi et al., 2008; Mukhopadhyay, 2000; Reverchon and Adami, 2006).

CO_2 molecule possess no dipole moment, which means that it is nonpolar and, when it is in supercritical state, CO_2 can a good solvent to

solubilize nonpolar subtances. However, CO_2 possess a quadrupole moment, which enables the dissolution of some polar and slightly polar compounds at high pressures. So, there is a limitation in the utilization of CO_2 as a supercritical fluid, because its solvation power for some compounds is limited. Though it is possible to modify its solvation power by the incorporation of a little amount of volatile organic solvents as co-solvent (Mukhopadhyay, 2000; Shoyele and Cawthorne, 2006).

5.2 Supercritical fluids and pharmaceuticals processing

As discussed in the previous sections, liposomes and other controlled delivery systems can be successfully produced by the conventional methods. However, these methods are multi-steps and need a large amount of organic solvent that can remain traces in the formulation (Lesoin et al., 2011d). In addition, conventional methods of liposome preparation obtain low encapsulation efficiencies mainly for hydrophilic compounds (York et al., 2004). As pharmaceuticals have a very strict legislation to control them, even the presence of traces of organic solvent is unaccepted. So, the utilization of supercritical fluid technology in pharmaceuticals processing may be a solution for these drawbacks and allow the development of products with better quality.

The utilization of supercritical fluids in pharmaceutical field has been under intense investigation since the 1980s (Pasquali and Bettini, 2008; York et al., 2004). Because of this, several research works have been published in result of that. One example of this is the micronization of rifampicin and tetracycline, antibiotics generally utilized for tuberculosis and chronic bronchitis, respectively. These drugs are usually administrated by oral route. However, the

administration of antibiotics per oral leads to a large range of side effects that would be minimized if the administration was via pulmonary route. To do this, it is necessary to reduce the particle size of the drugs, enabling the pulmonary administration (Reverchon and Della Porta, 2003).

Liposomes can be produced by several supercritical fluids processes. One of the first processes that produced liposomes was developed by Frederiksen *et al.* (1997). Solutions of two water soluble molecules (fluorescein isothiocyanate-dextran (FITC-dextran) and zinc phthalocyanine tetrasulfonic acid (TSZnPc)) were encapsulated into liposomes utilizing $scCO_2$. The encapsulation efficiency of these particles into liposomes was about 15%, which is about 50% less then encapsulation of water soluble compounds in liposomes made by DRV or reverse phase evaporation methods. However, liposomes made by supercritical fluid technique do not have contact with organic solvent, which happens in these two conventional preparation methods. Also, the possibility of scale-up the production is facilitated comparing with conventional method, which is another advantage of supercritical process.

Otake *et al*. (2001) developed a liposome preparation method that produces liposomes with high encapsulation efficiency for hydrophilic compounds utilizing $scCO_2$ instead of organic solvents. Briefly, phospholipid and ethanol were added to a variable volume view cell and then sealed. After that, CO_2 was added to the cell, the temperature was adjusted to a higher temperature than the phase transition temperature of the phospholipids and the pressure was maintained constant. After the system reaches the equilibrium, an HPLC pump slowly introduces an aqueous solution. After that point, the system pressure decrease, releasing the CO_2 and resulting in a homogeneous

liposomal dispersion. It is important to note that the system was under sufficient stirring during all the process to avoid lipid coalescence.

Imura *et al.* (2002) prepared liposomes with different composition. PC, PE, phosphatidylinositol (PI) and PA were used to prepare different types of liposomes: PC 95%; 32% PC, 32% PE, 17% PI and 9% PA. The method of preparation is the same used by Otake *et al.* (2001). It was shown that the second type of liposomes did not solubilize totally during the supercritical production of the vesicles and there was a white precipitate. The authors suggested that this precipitate could be PE, PI and PA, because they have low solubility than PC. The formed liposomes analyzed by freeze fractured transmission electronic microscopy (TEM). Liposomes that had the first constitution formed LUV particles and presented diameters of 0.2 – 1.2μm, similar to size of liposomes produced by Otake *et al.* (2001). However, the second composition obtained MLV particles, presenting diameters of 0.1 – 0.25μm.

An interesting study produced PEGylated liposomes using the SAS process to encapsulate docetaxel, one of the most important chemotherapeutic agents against cancer. Hydrogenated soy PC, soy PC and cholesterol in different proportions were utilized to produce the vesicles with DSPE-PEG_{2000}. The utilization of saturated and unsaturated phospholipids enhanced the liposomal stability in about 3 months with high entrapment efficiency. The vesicles formed were small unilamellar with a range of size between 200 – 300 nm. *In vitro* release studies showed that the vesicles presented controlled drug release during 48h. There was found no residual organic solvent in the end of the preparation (see Table 4.2). The authors concluded that PEGylated

liposomes produced by supercritical fluid technology are more stable, with smaller size and free from residual organic solvent (Naik et al., 2010).

Xia *et al.* (2012) produced proliposomes using the supercritical anti-solvent process. It was shown that the proliposomes, which are dry free-flowing particles, have a media size of 200nm with a narrow size distribution. The elevated pressure utilized in the system favors the formation of small molecules. After the hydration, the formed liposomes have size about 500nm. The authors affirms that the proliposomes are easily hydrated, producing unilamellar liposomes. The vesicles formed by supercritical fluids have entrapping efficiency of lutein that reaches 90%.

In another study, liposomes encapsulating amphotericin B were made based on the GAS process and their efficacy was tested against *Aspergillus fumigatus*. Liposomes were also produced by thin film hydration and then sonicated as a way to compare the methods. Liposomes produced by supercritical technique were smaller, with better morphology and size distribution then the vesicles made by the conventional method. Also, vesicles made by the GAS process presented better antifungal activity against *A. fumigatus* strain (Kadimi et al., 2007).

The utilization of supercritical fluids to encapsulate natural products into drug delivery systems has been under investigation. One of the delivery systems that has been utilized is niosomes. Niosomes are non-ionic surfactant vesicles that are similar to liposomes. However, niosomes are preferable to liposomes for topical delivery because they are more stable. The methods of preparation of niosomes are the same as liposomes and, to avoid the utilization of organic solvents, niosomes are also been prepared by supercritical fluid

processes (Manosroi et al., 2008). Manosroi *et al.* (2010) entrapped rice bran (*Oryza sativa* Linn.) extract into niosomes utilizing $scCO_2$ and the thin film hydration method. There was no significant difference in physical characteristics such as vesicle size and morphology. All niosomes were unilamellar structures with a range size of 60.34 ± 30.91 nm, which means that $scCO_2$ can be an alternative to the conventional production of niosomes also.

Table 5.1 concentrates some liposomal formulations prepared by supercritical fluid processes.

Table 5.1 – Liposomal formulations prepared by supercritical fluid techniques.

Phospholipid	Process/ Organic solvents	Temperature/ Pressure	Mean size (μm)	Morphology	Reference
PC + cholesterol	ASES Methanol + methylene chloride	35 – 55°C 85 – 105 bar		Dried liposomes	(Kunastitchai et al., 2006)
PC + cholesterol	GAS Chloroform + methanol	65 ºC 150 bar	0.15 – 1.5	Spherical	(Kadimi et al., 2007)
Soy PC	SEDS Ethanol	30 – 40 °C 80 – 120 bar	1	Spherical	(Li et al., 2008a, 2008b)
Soy PC + cholesterol + DSPE-PEG_{2000}	SAS Chloroform + methanol	Data not shown	0.20 – 0.30	Spherical	(Naik et al., 2010)
PC + cholesterol	RESS Ethanol	50 – 65 °C 200 – 300 bar	0.18	Spherical	(Wen et al., 2010)
Soy lecithin + cholesterol	SAS Ethanol	35 ºC 90 – 130 bar	0.10 – 1 8 – 500	Spherical	(Lesoin et al., 2011d)
Soy PC	SAS DCM* + ethanol	35 ºC 80 bar	0.20	Spherical	(Xia et al., 2012)

*DCM = Dichloromethane

As it can be seen, the utilization of supercritical fluid technology in the production of liposomes entrapping pharmaceuticals and biopharmaceuticals is a promising field under intense investigation. However, most of the techniques are discontinuous and present several steps, which affect the reproducibility of the processes. Furthermore, some of the organic solvents utilized are toxic, and, even the addition of small amounts of these solvents; the vesicles may present solvent residual quantities that forbid their administration in animals and human beings by the regulatory authorities. For this reason, it is necessary to suggest a continuous $scCO_2$ process that can produce liposomes with low solvent residue levels and that can use solvents that are generally recognized as safe (GRAS).

5.3 Supercritical fluid extraction (SFE)

Supercritical fluid extraction, as aforementioned, is an adaptation of a method proposed by Chattopadhyay *et al.* (2005), which is known as supercritical emulsion extraction (SEE), an innovative technique based on conventional solvent evaporation. SEE was proposed aiming the production of particles with controlled size distribution from oil-in-water emulsions (O/W) and, later, water-in-oil-in-water emulsions (W/O/W). Supercritical fluids can be used as extraction media because of some characteristics that these fluids present, such as (a) the selective solvation power that enables the selective extraction of the organic solvent, and (b) the favorable mass transfer properties, causing an efficient and rapid solvent removal from the emulsion. So, the supercritical fluids

extract only the oily phase of the emulsion, leading to the hardening of the polymer and, thus, promoting the formation of the particles (Falco, 2011). Furthermore, particles aggregation phenomena are not observed, due to the presence of the external water phase, immiscible with $scCO_2$, which prevents their aggregation (Campardelli, 2012).

In SEE processes, to promote more efficient extractions, the solvent that will be extracted has to be immiscible or partially miscible in water. When $scCO_2$ extract the solvent from the oily phase of the emulsion, it is formed an aqueous colloidal suspension of the particles. The more solvent is extracted from the emulsion, the higher is the saturation of the solute in the aqueous phase, leading to the precipitation of the solute and the production of small particles (Campardelli, 2012). However, most of the SEE processes are discontinuous (Chattopadhyay et al., 2006b; Chattopadhyay et al., 2007b; Shekunov et al., 2006b), which affects the repeatability of the results and reduction of process yields due to material lost. Because of that, Della Porta *et al.* (2011) suggested a continuous process layout in which the $scCO_2$ is left in contact continuously with the emulsion in a countercurrent mode. The suspension of micro and/or nanoparticles can be continuously collected at the bottom of the apparatus.

SEE-C process combines the advantage of conventional emulsion methods, such as control of particle size and surface properties; with the advantages of continuous supercritical fluids extraction technology, as short processing times, high reproducibility and high product purity.

So, since this technique is particularly suitable for the production of particles for controlled release applications, it was adapted for liposomes processing, aiming the removal of residual solvent from the bulk of the

suspension and producing a safe suspension that can be administrated in animals and human beings.

6. Preamble

As it was previously mentioned, the overall objective of this study is to evaluate the production of liposomes of controlled submicrometric size using a new continuous fluid process, named Supercritical Assisted Liposome formation (SuperLip). Furthermore, the encapsulation efficiency of insulin into liposomes and their coating with chitosan were also evaluated.

In order to describe all the process and the evaluated parameters in this study, this experimental work was divided in three parts: PART I – liposomes production through ethanol injection and solvent extraction using supercritical technology; PART II – liposomes production using supercritical technology; and PART III – chitosan coating and encapsulation of the protein into liposomes.

In section 7.1, it will be presented the experimental part related to the removal of residual organic solvent from the bulk of liposome suspension, prepared by ethanol injection, using a high pressure continuous packed tower based on SEE-C technique. To achieve this propose, the influence of pressure, temperature, phospholipid concentration and liquid-to-gas (L/G) ration were analyzed. SEE-C process has been under intense investigation and has been successfully applied in the production of biopolymeric micro- and nanoparticles. However, this is the first time that this process is applied for liposomes processing.

The variations of the parameter aforementioned were made in order to optimize the process conditions. It is important to mention that all the parameters values that were utilized were chosen based on the literature and on previous works realized on the Laboratory of Supercritical Fluids (University of Salerno).

This paper was already submitted to Journal of Drug Delivery Science and Technology.

In section 7.2, it will be presented the experimental work related to liposome production using a new continuous supercritical process. In this new process, liposomes are formed around the micro-and nanodroplets produced by atomization. Since this is a new process, feasibility tests were performed and parameters as temperature, pressure and nozzle diameter were carefully studied to validate it.

When the parameters were optimized in the conditions that gave liposomes with better dimensions and shape, preliminary encapsulation tests were also performed in this new technique using bovine serum albumin (BSA) as a water soluble protein model.

The paper of this work is already published at Chemical Engineering Journal, 08/2014; 249: 153-159. DOI: 10.1016/j.cej2014.03.099.

In section 7.3, it will be present the results related to the encapsulation tests performed with bovine serum albumin (BSA) and insulin. Furthermore, it will also present the coating tests performed with chitosan. Optimized parameters from section 7.2 were chosen to conduct this part of the experimental work.

The paper of this study is been submitted to The Journal of Supercritical Fluids.

7. Results and discussion

Ethanol Injection technology coupled with continuous Supercritical Extraction for liposome production

Islane Espirito Santo[1,2], Roberta Campardelli[1], Elaine Cabral Albuquerque[2], Silvio Vieira de Melo[2], Ernesto Reverchon[1], Giovanna Della Porta[1*]

[1]*Department of Industrial Engineering, University of Salerno, Via Giovanni Paolo II,132 Fisciano (SA) 84084, Italy*

[2] *PEI, Industrial Engineering Program, Department of Chemical Engineering, Federal University of Bahia, Rua Prof. Aristides Novis, 2, Federação, 40210-630, Salvador (BA), Brazil*

Keywords: Supercritical fluids, liposomes, continuous process

*Corresponding author: Giovanna Della Porta, phone: +39 089 964104; fax: +39 089 964057; e-mail: gdellaporta@unisa.it

ABSTRACT

Liposomes have been utilized as drug carrier due to their capability of improving activity and safety of therapeutic molecules; indeed, they are considered the safest ones in drug delivery, able to minimize side effects and protect them from early degradation. Among all the techniques for liposomes production, ethanol injection method is largely used due to its simplicity; i.e., an ethanol solution of lipids is rapidly dropped into an aqueous medium through a needle, dispersing the phospholipids throughout the medium and promoting the

vesicle formation. The main drawback of this method is the difficulty of removing ethanol from the bulk water suspension and from the liposomes membrane. Indeed, when solvent evaporation or dialysis are used loss of vesicles stability are reported; nevertheless, these methods can damage or compromise liposomes characteristics, as size and structure and may cause their aggregation. To overcome this drawback, a continuous supercritical assisted process is proposed to remove the organic solvent from the bulk of liposome suspensions produced by ethanol injection. It consists of the continuous processing of the liposomal suspension in a packed tower where supercritical carbon dioxide is fed in continuous mode. Different pressure, temperature and gas to liquid ratios have been explored in order to optimize the operative conditions and reach the lowest solvent residue in liposome suspensions. The results showed that this new process is particularly efficient in the eliminating of ethanol (reduced at values less of 500 ppm in the bulk suspension) preserving, at the same time, liposome structure. The effect of supercritical processing on, liposome size, distribution and stability has also been evaluated. Particularly, a 50% size reduction of the vesicles mean size and a distribution reduction of 1/3 were observed and nanosomes with a mean diameter of about 180 ± 40nm have been obtained at the optimum operative conditions; all the suspensions also showed good storage stability.

INTRODUCTION

Over the last decades, different kinds of drug delivery systems have been under intense investigation. One of them is liposome, a colloidal

association of amphiphilic lipids that organize themselves spontaneously in bilayer vesicles as result of unfavorable interactions between phospholipids and water (Allen and Moase, 1996; Imura et al. 2003; Joshi and Müller, 2009).

Liposomes showed to be effective carriers for the delivery of all kinds of agents into the cells; indeed, as lipid vesicles present lipophilic and hydrophilic portions that can entrap substances with different lipophilicities in the phospholipid bilayer, in the aqueous compartment or either at the bilayerinterface (Sharma and Sharma, 1997), in both cases the physicochemical properties and/or biological activity of entrapped compounds can be enhanced or modified (Chrai et al., 2002; Malam et al., 2009).

Several commercial techniques are reported in the literature for the preparation of liposome suspensions. The first one proposed involves the dissolution of phospholipids into an organic solvent and further dispersion of the dried lipids into water (hydration method); the hydration reduces the energy of the system and causes the increase of its specific surface area, leading to the maximum exposition of the polar head to water, liposomes are formed (Bangham et al., 1974). By sonication or high speed mixing at 60°C it is then possible to vary the distance between the lipid lamellae and influence the size of multi-lamellae vesicles (MLVs) or the formation of uni-lamellae ones (ULs) (Saunders, 1962; Vemuri and Rhodes 1995). The hydration method is relatively easy but produces liposomes with large polydispersity or bimodal size distribution and low trapped volume; moreover it has limited use because of its low encapsulation ability and limited scale up to large scale.

In the last decade, reverse phase evaporation method has been also described starting from a double water-oil-water emulsions evaporation; in this case the drug is loaded into the water internal phase and the liposome components is solubilised into the oily phase; the lipid membrane is then formed by solvent evaporation of the organic solvent of the oily phase. The liposome size is defined by the droplet size and a high trapping efficiency is also reported (Honda et al., 1987; Crommelin et al., 1994; Saeki et al., 1997). The main drawback of this method is the use of organic solvents such as chlorophorm, isopropylether and methylene chloride that have to be removed from the bulk liposomes suspension. The rapid injection of lipids dissolved in ethanol into a water or water/surfactant solution is recently reported as a robust technique for liposomes production conventionally named Ethanol Injection; it can produce Small Uni-Lamellar vesicles (SULs) by using different strategies for the organic and water solution mixing. The technique was developed by Batzri and Korn (1973) and optimized by several authors up to the pilot scale because it was reported as a simple, rapid and easy to scale-up method. The liposomes size, encapsulation efficiency lamellarity and stability are well controlled and reproducible (Pons et al., 1993; Vemuri et al., 1990).

Although, various techniques have been developed for the bench scale liposome formation, the broad application of liposomes in drug delivery is still impeded due to scale up issues. For example, liposome formation processes should be validated according to Good Manufacturing Practice (GMP) protocols prior to commercialization. Particularly, all the commercial techniques proposed and scaled-up showed a consistent difficulty to remove solvents from the

liposomes membrane and from the bulk of the suspension leading to a serious drawback for process industrialization. Indeed, although these organic solvents help to achieve a molecular mixture of lipids and, therefore, a uniform distribution of lipids in the lipid bilayers, their residual amount in the final preparation could pose health hazard to the end users. Moreover, solvent evaporation technology, conventionally used for solvents removal tends to concentrate the lipids, as well as, the contaminants; also the ethanol removal is very difficult and may lead to physical destabilization of liposomes by interfering with the cooperative hydrophobic interaction among the phospholipid methylene groups that hold the structure together (Vemuri and Rhodes, 1995; Wagner et al. 2002 and 2006).

The utilization of supercritical fluid for the solvent extraction from emulsions and/orsuspension has been recently proposed as a new technique for the production of biopolymer microspheres. The extraction technology can overcome several disadvantages of the conventional ones, such as high processing temperatures and long extraction times. Particularly, above to the critical point, small changes in temperature or pressure can produce large changes in the density/solvation ability of supercritical fluids; this property can be fruitfully exploited for the extraction of organic solvents. In addition, lower viscosity and higher diffusivity of a supercritical fluid with respect to the liquid solvent improve mass transfer, which is often a limiting factor for the solvent elimination from emulsion or suspension (Della Porta and Reverchon, 2008; Campardelli et al. 2012 and 2013). Among all the possible supercritical fluids, carbon dioxide (SC-CO2) is largely used. For example, recent studies

confirmed that the SC-CO2 is an excellent solvent for oily phase upon contact with the aqueous phase of the emulsion leading to rapid diffusion of solvent from the emulsion droplets; the -process is also faster than the conventional solvent evaporation of emulsion, resulting in the prevention of any particles coalescence or aggregation (Della Porta and Reverchon, 2011).

The purpose of this work is to evaluate the use of supercritical carbon dioxide to extract ethanol from the bulk of liposome suspensions produced by ethanol injection avoiding vescicles degradation or loss by a high pressure extraction tower operating in a continuous layout. Different liposomes suspensions are prepared by ethanol injection method at different phospholipid concentrations and size distribution; they are then, processed to evaluate the effect of supercritical processing parameters such as, various pressures, temperatures and liquid to gas ratio on liposomes stability and size distribution. Solvent residues are always evaluated at the end of each supercritical processing to verify the process efficacy.

MATERIALS AND METHODS

Materials

Soybean phosphatidylcholine (Soy PC) was provided by Lipoid (Ludwigshafen, Germany). Distilled water was used throughout the formulations. CO_2 (Naples, Italy). Other reagents and organic solvents were, at least, of analytical grade and used such as without further purification.

Liposome production

Liposomes were prepared by ethanol injection method adapted from Justo and Moraes (2011). Briefly, soy PC was dissolved in heated ethanol (40°C) to improve the miscibility of the phospholipid into the organic solvent. An ethanol solution of soy PC was continuously pumped and added into water through a stainless steel needle. Ethanol and water were used in the ratio 5/95.

Liposomes suspensions were then sonicated using the Digital Sonifier Branson (mod. 450, 1⁄2” diameter micro-tip, 20 kHz) at 60% of the power for 2 minutes. Lipid concentration was varied from 5 mM to 15 mM.

Continuous supercritical fluid extraction (SFE)

The apparatus based on a high pressure packed tower capable of working under pressure has been designed and constructed on purpose. The bench scale-plant consists of at around 2000 mm long column with an internal diameter of 13 mm packed with stainless steel packing with a specific surface area and thermally insulated and controlled. Carbon dioxide is fed from the bottom of the column by a high-pressure diaphragm pump at a constant flow rate, whereas, the liposome suspension is fed to the column by a high pressure pump at the column top. A separator located downstream the top of the column is used to recover the extracted solvent and the pressure in the separator is regulated by a backpressure valve. Before starting the suspension delivery, the column is wetted using water. The treated liposome suspensions were recovered at the bottom of the tower by a needle valve. A schematic representation of the continuous process is depicted in Figure 7.1.1.

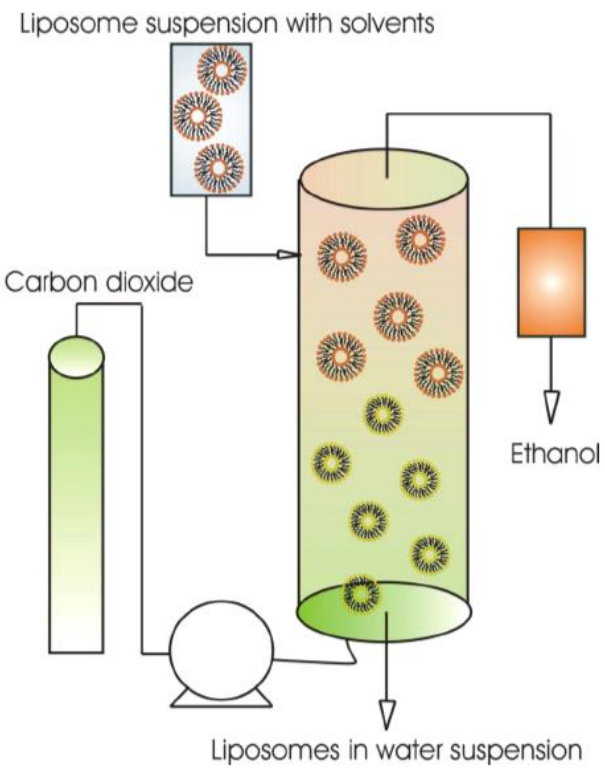

Figure 7.1.1. Schematic representation of the solvent removal from liposomes by supercritical extraction into countercurrent packed tower,

Morphology analysis

Before SEM analysis, liposomes were prepared through fixation (glutaraldeide 3% w/w) and ethanol dehydration; then, dried by critical point drier (mod. K850, Quorum Technologies Ltd, East Sussex, United Kingdom) and coated with chromium using a sputter cold coater (mod. K575XD, Quorum Technology, Ashford, UK) to make their surfaces electrically conductive. Scanning Electron Microscope (FE-SEM mod. LEO 1525, Carl Zeiss SMT AG, Oberkochen, Germany) was used for morphological investigation.

Size distribution analysis

A granulometer (Zetasizer mod. NanoZS Malvern Inc., Wocherstershire, UK) equipped with a 5.0 mW He-Ne laser operating at 633 nm was used for the measurements of the liposomes mean size, size distribution and Zeta potential. Samples were analyzed in plastic cuvette at 25°C and scattering angle of 173°; all the results are based on an average of 3 measurements, which are calculated thanks to an average on 11 runs. Samples were analyzed for Zeta potential of particles using standard settings with three repeated measurements of 20 zeta runs and assessing the quality of measurements by evaluation of the phase plot. Zeta potential indicates the potential difference between the dispersion medium and the stationary layer of fluid attached to the dispersed particle. It is a key indicator of the stability of colloidal dispersions.

Solvent residue analysis

Ethanol content in the final liposomes suspensions was analyzed, to monitor the efficiency of solvent removal from the suspension after SC-CO2 extraction. The solvent residue was measured using a head space sampler (mod. 50 Scan, Hewlett & Packard, Palo Alto, CA, USA) coupled to a gas chromatograph interfaced with a flame ionization detector (GC-FID, mod. 6890 Agilent Series, Agilent Technologies Inc., Wilmington, DE). Ethanol was separated using a fused-silica capillary column 30 m length, 0.25 mm internal diameter, 0.25 µm film thickness (mod. DB-1, J&W, Folsom, CA, USA). GC conditions were: oven temperature at 40°C for 8 min. The injector was maintained at 180°C (split mode, ratio 1:1) and Helium was used as the carrier gas (7 mL/min). Head space conditions were: equilibration time 60 min at 100

°C, pressurization time 2 min, loop fill time 1 min. Head space samples were prepared in 10 mL vials filled with 3 mL of suspension. Analyses were performed on each sample in three replicates.

RESULTS AND DISCUSSION

Operating conditions of pressure and temperature were chosen to allow a selective extraction of the ethanol from the liposomes suspensions. Considering the high pressure vapor-liquid equilibrium diagram (VLE) of the system ethanol/CO2 (Chiu et al., 2008), that indicated the equilibrium pressure/composition values at fixed temperatures, the operating point was selected above the mixture critical point (MCP); i.e., in a pressure range of 100-120 for a temperature of 38°C (see Figure 7.1.2) and at pressure of 120 for temperatures of 50 and 60°C. At these conditions the solubility of the water in SC-CO2 is very limited and a selective extraction of the ethanol in the liposomial suspension should be obtained. Moreover, at the selected pressure/temperature conditions also PC is not soluble in ethanol/carbon dioxide mixture; indeed as reported by Teberikler et al. (2001) the selective PC extraction from deoiled soybean lecithin was only obtained when operating at 60°C and in the pressure ranges of 170-200 bar with a mixture ethanol/CO2 of 10:90. The liquid to gas ratio (L/G) was explored in the range of 0.1 and 0.05; whereas, CO_2 flow rate of 1.4 kg/h was used as a consequence of a previous optimization of the tower fluid dynamics (Falco et al., 2012). The process

performance evaluations were always performed after reaching the steady state conditions in the column by wetting the column packing with water.

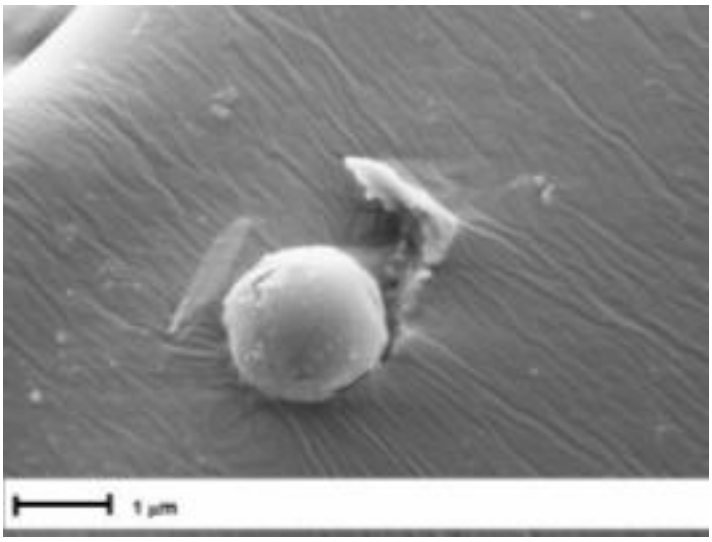

Figure 7.1.2. FESEM image of liposome produced by ethanol injection using a PC concentration in ethanol of 5mM.

Effect of extraction pressure

The effect of operative pressure on ethanol extraction from suspension was explored on a liposome with a mean size of 358 nm and a standard deviation of ± 250 nm; the suspension was produced by ethanol injection using a solution with PC concentration of 5mM. The Zeta potential value of the suspension was of -27, indicating a good suspension stability; indeed, although PC is a zwitterionic phospholipid, the negative Zeta potential can be due to the presence of very low sodium and potassium ions concentration in the external medium because no buffer solution were used for the analyses (Sabin et al., 2006). The morphology of the prepared vesicles was evaluated by FE-SEM microscopy. The vesicles showed a spherical shape and bilayer integrity, as

illustrated in Figure 7.1.3, where a SEM image of the dried vesicles is proposed. The ethanol concentration in the dispersionst hat was about 40000 ppm.

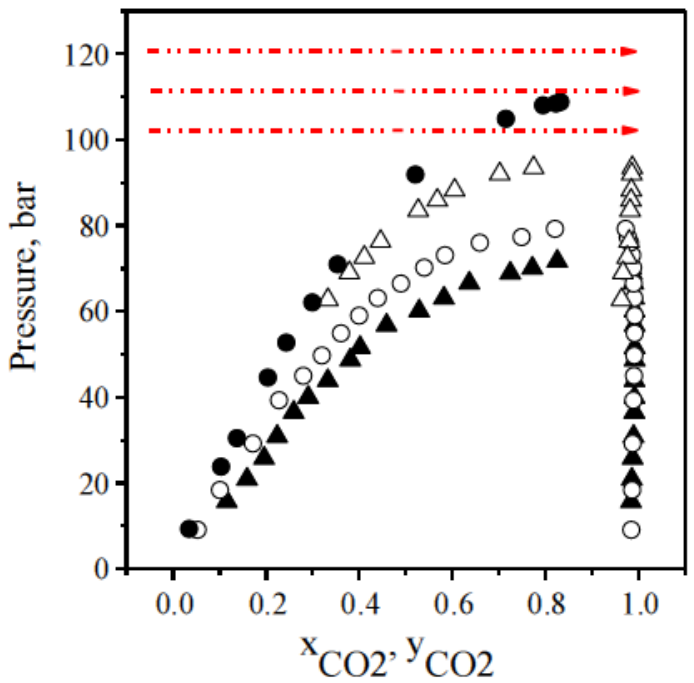

Figure 7.1.3. Vapor Liquid Equilibrium diagram for the binary system CO_2-Ethanol at different temperatures: ▲ 35°C; ○ 40°C: Δ 50°C and ● 60°C; adapted from (Chiun et al., 2008) and solvent mixture composition trajectories during the supercritical extraction.

To select the best pressure condition that can assure a good ethanol removal, as well as, liposome vesicles integrity after processing, the suspension was processed at 38°C and at three different pressures: 100, 110 and 120 bar with an L/G ratio of 0.05. Samples of the processed suspension were analyzed by GC-FID to monitor the amount of residual ethanol. The effect of pressure on liposome mean diameters and on ethanol residue in the suspensions are

summarized in Figure 7.1.4a and Figure 7.1.4b, respectively, whereas, all the data related to the effects of extracting pressure are proposed in Table 7.1.1. Increasing the extraction pressure from 100 to 110, a reduction of the liposomes mean size was observed to the 45-46 % of the initial size (shrinkage value), as well as, a more effective ethanol extraction was observed. At 120 bar, the liposomes mean size was reduced to the 53%; i.e., to a value of 169 nm with a standard deviation of ±59 nm. In the same condition, the ethanol residue was reduced at values less than 1500 ppm, so well below the limit reported by the United States Pharmacopeia (USP 30), which is 5000 ppm (USP30, 2007).

Table 7.1.1. Size and standard deviation, zeta potential and ethanol residue after the supercritical extraction of liposomes at different pressures and at 38°C, L/G 0.05. Data on untreated liposomes are reported for comparison purpose.

Data	Untreated	SFE 100 bar	SFE 110 bar	SFE 120 bar
Mean size and SD (nm)	358 ± 250	200 ± 50	164 ± 49	169 ± 59
Zeta potential (mV)	- 27.0	- 16	- 10	- 14
Ethanol (ppm)	40000	5000	4500	1500
Shrinking factor (%)	--	**45**	**46**	**52**

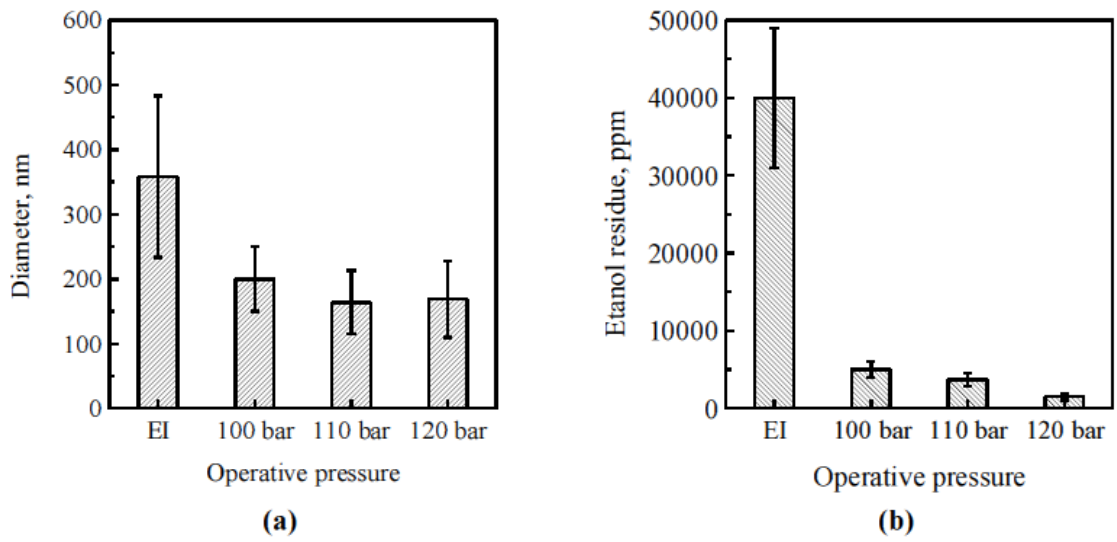

Figure 7.1.4a-b. Effect of operating pressure on liposome mean size **(a)** and ethanol residue **(b)** in the extracted suspension at 38#C, L/G 0.05.

As it is the first work in which ethanol is extracted from liposomes by carbon dioxide in a countercurrent packed tower, there is no other data in the literature to make a full comparison of the results. However, the observed liposomes shrinking may be not only due to the ethanol extraction (that is also strongly improved by the increase of extraction pressure) but also, to a possible vesicles rearrangement when forced on stainless steel packing elements contained into the high pressure column. Indeed, the same packing elements are also reported to be used as internal component of static mixer. This second hypothesis may be also supported by the drastically reduction of the liposomes size distribution, reduced of one fourth. The extracted suspension showed a Zeta potential between – 16 and -10 indicating well vesicles stability. The slight decrease of the Zeta potential value with respect to the untreated suspension can be due to the pH variation of the suspension after the supercritical extraction; indeed, it is well know that the solubilisation of carbon dioxide in

water generate carbonic acid that induces a pH reduction (Reverchon et al., 2003) that may influence the Zeta potential value of the produced suspension. The liposomes stability was monitored during one month of storage at 4°C (every week) by evaluation of the suspension mean size and zeta potential periodically, confirming that the liposome distribution and stability was maintained over the time without any significant variation.

This preliminary result indicates that the supercritical process can be very interesting not only to remove ethanol residue from the suspension bulk but also to control the liposomes size. A pressure of 120 bar was selected in the follow experiments, because produced the best ethanol extraction.

Effect of liposomes initial size

To better understand if the packed column may have an additional effect on liposomes size or the observed shrinking values were only due to ethanol extraction, liposomes suspensions of different sizes were treated. Particularly, three different suspensions were prepared using different Soy PC concentration in ethanol of 5, 10 and 15 mM, respectively. The preparations showed different mean diameters with an average size of 360 ± 120 nm, 530 ± 190 nm and 650 ± 260 nm, in dependence of the PC concentration used of 5, 10 and 15 mM, respectively; moreover, a very large size distribution of vesicles was also detected as can be observed in Figure 5a where, the vesicle distribution curves are plotted. Indeed, it is reported in the literature that increasing the phospholipids concentration in ethanol also the mean size of the generated liposomes increases when produced by ethanol injection (Nagayasu et al.,

1999). All others distribution data of the different dispersions analyzed by laser scattering are listed Table 2. The ethanol residue of the dispersions prepared was always higher than 40000 ppm and the Zeta potential values that ranged between -25 and -29 for all the suspensions.

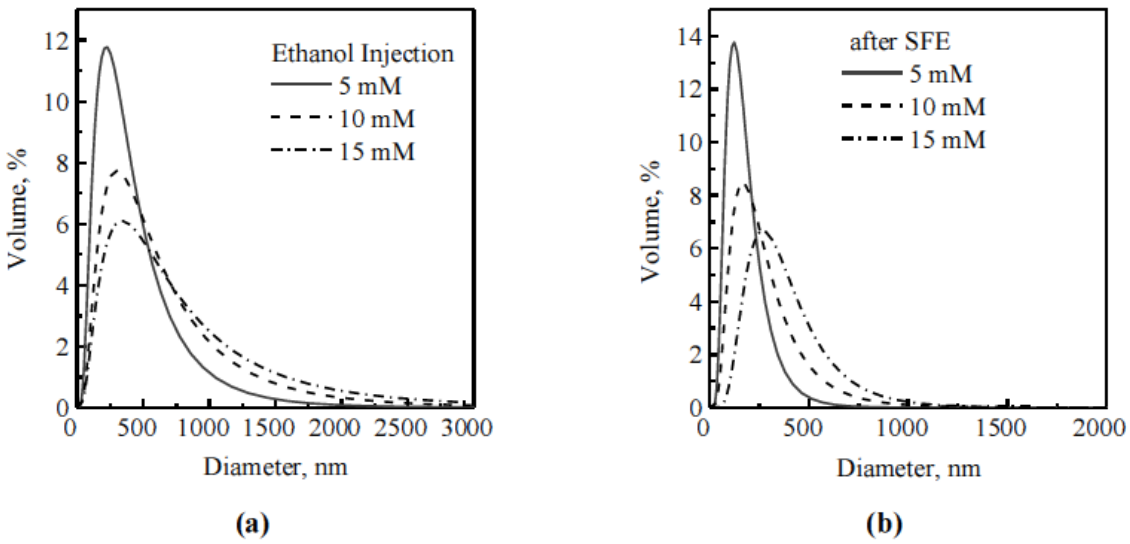

Figure 7.1.5a-b. Size distributions of liposomes obtained by ethanol injection at different PC concentrations in ethanol, before **(a)**, and after supercritical extraction operating at 120 bar and 38°C with L/G ratio of 0.05 **(b)**.

The three different suspensions were processed at 120 bar 38°C and an L/G ratio of 0.05 and all the results data are also listed in Table 7.1.2. A reduction of the liposome mean sizes of almost 50% of the initial size was always observed after the supercritical extraction; moreover, as it is possible to observe from the distributions curve reported in Figure 5b, the most important result is the drastically reduction of the size distributions in all the suspension processed, with standard deviation values reduced from 120-260 nm between 60-50 nm. In Figure 6 is also reported a comparison of the liposome mean sizes

after the supercritical extraction versus the initial ones; from the diagram it is possible to appreciate that the vesicles shrinkage is always the same and, therefore, liposomes of different final size were produced. This result is very important because in the hypothesis of vesicles rearrangements during the passage through the column packing element always the same final mean size should be expected. On the contrary, if the size reduction is mainly due to the ethanol extraction, always the same vesicle shrinkage should be expected and the final liposomes size will mainly be related from the initial ones, as in this case.

Table 7.1.2. Size and standard deviation, zeta potential and ethanol residue data of liposomes obtained by ethanol injection at different PC concentration in ethanol before and after supercritical extraction at 120 bar 38°C and L/G ratio of 0.05.

PC concentration in ethanol (mM)	**5**	**10**	**15**
Mean size and SD (nm)	360 ± 120	530 ± 190	650 ± 260
Zeta potential (mV)	- 27.0	- 29.4	- 26.3
Ethanol content (ppm)	40000	40000	40000
Supercritical extracted			
Mean size and SD (nm)	160 ± 42	238 ±72	344 ± 86
Zeta potential (mV)	- 13.7	- 16.05	- 11.80
Ethanol content (ppm)	1522	1530	1580
Shrinking factor (%)	**55**	**55**	**47**

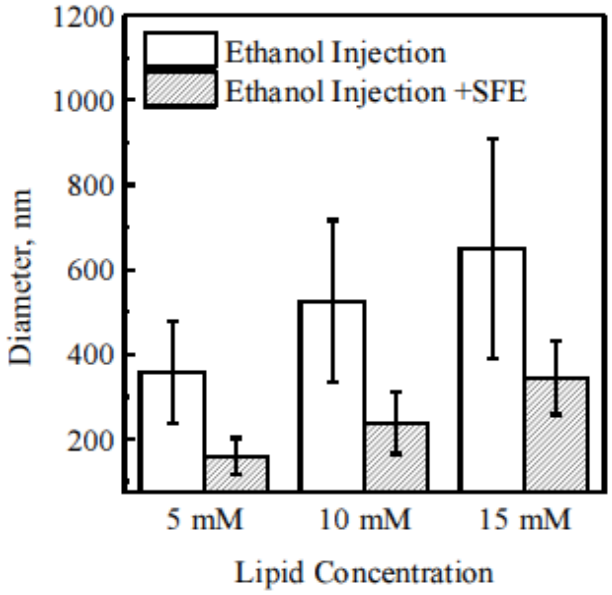

Figure 7.1.6. Mean size of liposomes obtained by ethanol injection method at different PC concentration in ethanol before and after supercritical extraction operating at 120 bar and 38°C with L/G ratio of 0.05.

It also means, that assuming a shrinkage of 50% at the optimum operative conditions, varying the liposome mean size produced by ethanol injection it is possible a selective control of the liposomes final size and distribution.

Effect of operative temperature and residence time

Additional runs were performed increasing the operative temperature from 38°C to 50 and 60° at 120 bar with an L/G ratio of 0.05. In these runs the liposomes suspension prepared at 5 mM was used. The aim was to further improve the ethanol extraction and understand if a further reduction of vesicles size was possible. The liposomes size distributions produced were plotted in Figure 7a; whereas, all the distribution data and ethanol residues are listed in

Table 7.1.3. The ethanol concentration was reduced from 1500 to 700 and 500 ppm, increasing the operative temperature from 38 to 50 and 60°C; however, a liposomes shrinkage of about 50% was always measured. Indeed, when operating at 60°C the lowest ethanol content was obtained but no significant improvement of liposomes shrinkage was observed; i.e., from liposomes mean size of 360 ± 120 nm a mean vesicle size of 177±53 nm was obtained. This result may suggest that liposome shrinkage of 50% as well as size distribution reduction of almost one third are such limiting value for vesicles stability.

Table 7.1.3. Size and standard deviation, zeta potential and ethanol residue after supercritical extraction at 120 bar and different temperatures and L/G ratios. Data of untreated liposomes are reported, for comparison purpose.

Untreated liposomes			
Mean size and SD (nm)		360 ± 120	
Zeta potential (mV)		- 27.0	
Ethanol content (ppm)		40000	
SC extracted L/G 0.1	**38°C**	**50°C**	**60°C**
Mean size and SD (nm)	203 ± 61	173 ± 54	184 ± 64
Zeta potential (mV)	- 13.7	- 10.9	- 10.8
Ethanol content (ppm)	3087	1759	1358
Shrinking factor (%)	**43**	**52**	49
SC extracted L/G 0.05	**38°C**	**50°C**	**60°C**
Mean size and SD (nm)	169 ± 60	176 ± 57	177 ± 53
Zeta potential (mV)	- 14.7	- 11.9	-10.8
Ethanol content (ppm)	1522	707	530
Shrinking factor (%)	**53**	**51**	**51**

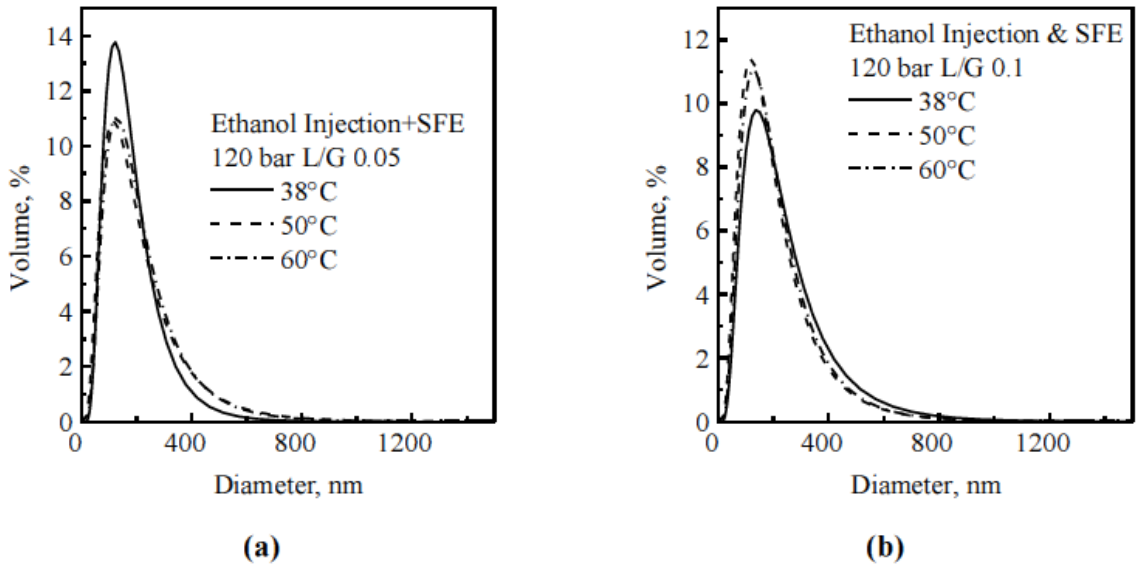

Figure 7.1.7a-b. Size distributions of liposomes obtained after SFE processing at different temperatures at 120 bar with L/G ratio of 0.1 **(a)** and of 0.05 **(b)**.

The effect of L/G ratio at different temperature from 38°C to 50 and 60°C at 120 bar was also tested to further understand if vesicles residence time into the packed column may have an effect on their size, size distribution and ethanol content at the end of extraction. In these runs always the liposome suspension prepared at 5 mM was used with liposome mean size of 360 ± 120 nm. All the distribution data and ethanol residues are listed in Table 7.1.3. When an L/G ratio of 0.1 was tested a not good ethanol extraction was monitored (see data in Table 7.1.3) and vesicles with larger size and distribution were produced, as is possible to observe from the liposome size distributions were plotted in Figure 7b. This result is probably due to a faster passage into the column of the liposomal suspension that will prevent an effective extraction. The effect of ethanol content in the final suspension at different operating temperatures and L/G ratio is also illustrated in the plot reported in Figure 7.1.8,

where is clear that the best extraction performance is obtained when an L/G ratio of 0.05 is used, for all the temperatures explored.

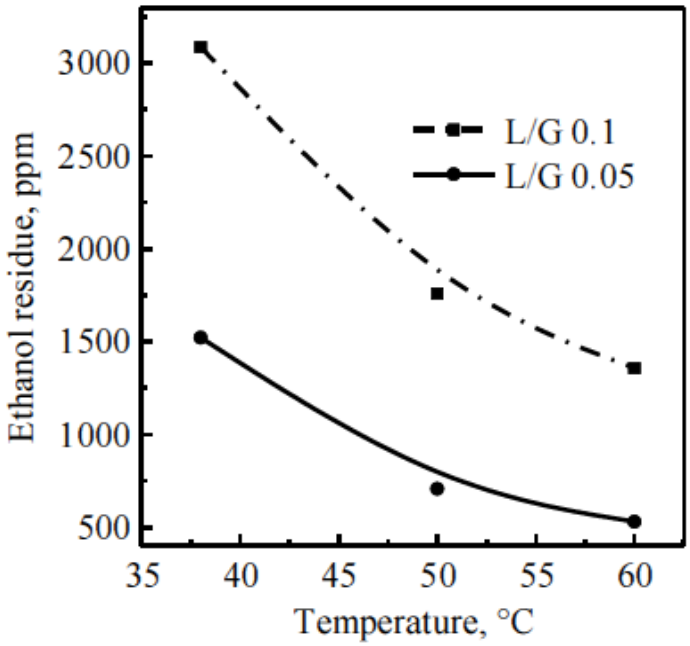

Figure 7.1.8. Effect of operating temperatures and L/G ratios on ethanol residue in the liposome suspensions extracted at 120 bar.

All the liposome obtained must be MLVs and liposome shrinkage related to different ethanol contents were already reported by several authors (Vemuri and Rhodes, 1995; Imura et al., 2003); however, the vesicles shrinkage observed after ethanol elimination by supercritical extraction may be also due to changement of liposomes physicochemical properties caused by the presence of ethanol/carbon dioxide supercritical mixture. Indeed, several authors reported methods for the preparation of liposomes using carbon dioxide/ethanol supercritical mixtures and often vesicles with smaller mean sizes were produced with respect to the conventional technologies. As an examples LUVs

with a diameter of about 200 nm were reported by a rapid expansion of a homogeneous phospholipid/ethanol/CO2 mixture and simultaneous mixing with an aqueous solution by passing the resultant gas/water mixture through a specially designed mixing column (Frederiksen et al. 1997); the method can be regarded as a rapid expansion of supercritical solution (RESS) technology.

Phospholipid vesicles with diameters from 200 nm to 20 μm were also reported by several authors (Badens et al. 2000; Otake et al., 2001; Meure et al., 2008) by using the supercritical technology and ethanol/carbon dioxide mixtures. Recently, Espirito Santo et al. (2014) also reported a continuous supercritical fluid process, named Supercritical Assisted Liposome formation to prepare nanosomes of controlled size, using an expanded liquid mixture formed by phospholipids/ethanol/Carbon dioxide. In all the described techniques the ethanol residue in the produced suspensions is still an issue to be solved.

CONCLUSIONS

Supercritical fluid extraction technology by means of a countercurrent packed tower was proposed as an innovative method for ethanol elimination from liposome suspensions generated by conventional ethanol injection. Operating at pressures of 120 bar and in temperature range of 38-60°C, the ethanol content was reduced up to 1000 and 500 ppm and a liposome shrinking of 50% was monitored coupled to a size distribution reduction of about one third. Always stable suspensions were produced. The results proposed suggested that the supercritical process can be considered an interesting

technology not only to remove ethanol residue from the suspension bulk but also to control the liposome sizes and distributions. Indeed, assuming a fixed vesicles shrinking percentage of 50% after supercritical processing, liposome and nanosome with engineered size and controlled distribution can be obtained in dependence of their initial size. The proposed technology involves only a single step and, therefore, can be considered an easy scale-up liposome production method even if some aspects of vesicles shrinkage are still open.

AKNOWLEDGEMENTS

The authors would like to thank Brazilian National Institutes of Science and Technology (CNPq/INCT – Nanobiofar Project and CAPES foundation – grant number 5780-11-0) for the financial support.

REFERENCES

Allen, T.M., Moase, E.H. 1996. Therapeutic opportunities for targeted liposomal drug delivery. Adv. Drug Delivery Rev. 21(2), 117-133.

Badens, E. Magnan, C., Charbit, G. 2001. Microparticles of soy lecithin formed by supercritical processes. Biotech. Bioeng. J. 72, 194-204.

Bangham, D., M.W., Hill, Miller N.G.A. 1974. Preparation and Use of Liposomes as Models of Biological Membranes. Methods in Membrane Biology. 1, 1-68. Batzri, S., Korn, E.D. 1973. Single bilayer liposomes prepared without sonication. Biochim. Biophys. Acta-Biomembranes. 298(4), 1015-1019.

Campardelli, R., Reverchon, E., Della Porta, G. 2012. Solvent elimination from polymer nanoparticle suspensions by continuous supercritical extraction. Supercritical Fluids J. 70, 100-105.

Campardelli, R., Cherain, M., Perfetti, C., Scognamiglio, M.R., Reverchon, E., Iorio, C., Della Porta, G. 2013. Lipid nanoparticles production by supercritical fluid assisted emulsion–diffusion. Supercritical Fluids J. 82, 34-40.

Campardelli, R., Reverchon, E., Della Porta, G. 2013. Monodisperse biopolymer nanoparticles by Continuous Supercritical Emulsion Extraction. Supercritical Fluids J. 76, 67-73.

Chiu, H.Y., Lee, M.J., Lin, H. 2008. Vapor-Liquid Phase Boundaries of Binary Mixtures of Carbon Dioxide with Ethanol and Acetone. J. Chem. Eng. 53, 2393-2402.

Chrai, S., Murari, R., Ahmad, I. 2002. Liposomes (a review). Part two: Drug delivery systems. BioPharm. 15(1), 40-49.

Crommelin D.J.A., Grit, M., Talsma H., Zuidam N.J. 1994. Liposomes as Carriers for Drugs and Antigens: Approaches to Preserve Their Long Term Stability. Drug. Dev. Ind. Pharm. 20(4), 547-556.

Della Porta, G., Reverchon, E. 2008. Nanostructured Microspheres Produced by Supercritical Fluid Extraction of Emulsions. Biotech. Bioeng. J. 100(5), 1020-1033.

Della Porta, G., Reverchon, E. 2011. Continuous Supercritical Emulsions Extraction: a New Technology for Biopolymer Microparticles Production. Biotech. Bioeng. J. 108(3), 676-686.

Espirito Santo, I., Campardelli, R., Albuquerque, E.C., Vieira de Melo, S. Della Porta, G., Reverchon, E. 2014. Liposomes preparation using a supercritical fluid assisted continuous process. Chem. Eng. J. 249, 153-159.

Falco, N., Reverchon, E., Della Porta, G. 2012. Injectable PLGA/hydrocortisone formulation produced by continuous supercritical emulsion extraction. Int. J. Pharm. 441, 589-597.

Falco, N., Reverchon, E., Della Porta, G. 2012. Continuous Supercritical Emulsions Extraction: Packed Tower Characterization and Application to Poly(lactic-co-glycolic Acid) plus Insulin Microspheres Production. Ind. Eng. Chem. Res. 51, 8616-8623.

Frederiksen, L., Anton, K., Hoogevest, P.V, Keller, H., Leuenberger, H. 1997. Preparation of liposomes encapsulatins water-soluble compounds using supercritical carbon dioxide. J Pharm Sci. 86, 921-928.

Honda, T., Takeuchi, H., Ohokubo, Y., Kawashima, Y. 1987. Lyophilized liposomes prepared by a modified reverse-phase evaporation method. Chem. Pharm. Bull. 35, 748-755.

Imura, T., Gotoh, T., Otake, K., Yoda, S., Takebayashi, Y. Yokoyama, S., Takebayashi, H., Sakai, H., Yuasa, M., Abe, M. 2003. Control of Physicochemical Properties of Liposomes Using a Supercritical Reverse Phase Evaporation Method. Langmuir. 19, 2021-2025.

Joshi, M.D., Müller, R.H., 2009. Lipid nanoparticles for parenteral delivery of actives. European Pharm. Biopharm. J. 71, 161-172.

Justo, O.R, Moraes, A.M. 2011. Analysis of process parameters on the characteristics of liposomes prepared by ethanol injection with a view to process scale-up: effect of temperature and batch volume. Chem Eng Res Des. 89,785-792.

Malam, Y., Loizidou, M., Seifalian, A.M. 2009. Liposomes and nanoparticles: nanosized vehicles for drug delivery in cancer. Trends in Pharmacological Sci. 30(11), 592-599.

Meure, L.A. Foster, N.R., Dehghani, F. 2008. Conventional and dense gas techniques for the production of liposomes: A review. AAPS Pharm. Sci. Tech. 9, 798-809.

Nagayasu, A., Uchiyama, K., Kiwad, H. 1999. The size of liposomes: a factor which affects their targeting efficiency to tumors and therapeutic activity of liposomal antitumor drugs. Adv. Drug Del. Rev. 40, 75-87.

Otake, K., Imura, T., Sakai, H., Abe, M. 2001. Development of a new preparation method of liposomes using supercritical carbon dioxide. Langmuir. 17, 3898-3901.

Pons, M., Foradada, M., Estelrich, J. 1993. Liposomes obtained by the ethanol injection method. Int. J. Pharm. 95(1-3), 51-56.

Reverchon, E., Della Porta, G., Spada, A. 2003. Ampicillin micronization by supercritical assisted atomization. Pharm. Pharmacology. J. 55(11), 1465-1471.

Saeki, Y., Matsumoto, N., Nakano, Y., Mori, M., Awai, K., Kaneda, Y. 1997. Development and Characterization of Cationic Liposomes Conjugated with HVJ: Reciprocal Effect of Cationic Lipid for In Vitro and In Vivo Gene Transfer. Human Gene Therapy. 8(17), 2133-2141.

Sabin, J., Prieto, G., Ruso, J.M., Hidalgo Alvarez, R., Sarmiento F. 2006. Size and stability of liposomes: A possible role of hydration and osmotic forces. Eur. Phys. J. 20, 401-408.

Saunders, L., Perrin, J., Gammack, D. 1962. Ultrasonic irradiation of some phospholipid sols. J. Pharm. Pharmacol., 14, 567-572.

Sharma, A, Sharma, U. 1997. Liposomes in drug delivery: progress and limitations. Int. J. Pharm. 154, 123-140.

Teberikler, L., Koseoglu, S., Akgerman A. 2001. Selective Extraction of Phosphatidylcholine from Lecithin by Supercritical Carbon Dioxide/Ethanol Mixture. JAOCS, 78(2), 115-120.

USP30 2007. The United States Pharmacopeia, American Pharmaceutical Association.

Vemuri, S., Yu, C., Wangsatorntanakun, V., Roosdorp, N., 1990. Large-scale production of liposomes by Microfluidizer. Drug. Dev. Ind. Pharm. 16, 2243-2256.

Vemuri, S, Rhode, C.T. 1995. Preparation and characterization of liposomes as therapeutic delivery systems: A review. Pharmaceutica Acta Helvetiae. 70(2), 95-111.

Wagner, A., Vorauer-Uhl K., Katinger, H. 2002. Liposomes produced in a poilot scale: production, purification and efficiency aspects. European J Pharm. BioPharm. 54, 213-219.

Wagner, A., Platzgummer, M., Kreismayr, G., Quendler, H., Stiegler, G., Ferko, B., Vecera, G., Vorauer-Uhl K., Katinger, H. 2006. GMP production of liposomes: a new industrial approach. J. Liposome Res. 16(3), 311-319.

Liposomes Preparation using a Supercritical Fluid assisted Continuous Process

Islane Espirito Santo[1,2], Roberta Campardelli[1], Elaine Cabral Albuquerque[2], Silvio Vieira de Melo[2], Giovanna Della Porta[1], Ernesto Reverchon[1*]

[1]*Department of Industrial Engineering, University of Salerno, Via Giovanni Paolo II,132 Fisciano (SA) 84084, Italy*

[2] *PEI, Industrial Engineering Program, Department of Chemical Engineering, Federal University of Bahia, Rua Prof. Aristides Novis, 2, Federação, 40210-630, Salvador (BA), Brazil*

Keywords: Supercritical fluids, liposomes, continuous process

*Corresponding author: Ernesto Reverchon Tel.: +39 089964116; Fax: +39 089964057; e-mail address: ereverchon@unisa.it

ABSTRACT

Liposomes are formed by phospholipids that spontaneously generate bilayers vesicles as a consequence of their interactions with water; they can be very efficient drug carriers, capable to the preserve activity and/or improve the safety of several therapeutic molecules. In this paper, a new continuous supercritical fluid process, named Supercritical Assisted Liposome formation (SuperLip), is proposed to prepare liposomes of controlled submicrometric size. Water droplets are produced by atomization inside a high pressure vessel, filled

with an expanded liquid mixture formed by phospholipids/ethanol/Carbon dioxide (CO_2). These droplets are rapidly surrounded by a lipid layer and liposomes are formed. Liposomes with controlled dimensions and high encapsulation efficiency, containing water soluble drugs are generated. Experiments have been performed varying process operating parameters like pressure, temperature and flow rate ratio between CO_2 and ethanol, producing liposomes of different size and distribution ranging between 130±62 and 294±144 nm. The results demonstrated that atomized liquid droplets are transformed efficiently into liposomes as a consequence of the spontaneous organization of the vesicles on the fly in the high pressure vessel.

Drug encapsulation feasibility tests were also performed using bovine serum albumin (BSA), used as a model protein; high encapsulation efficiencies (85-90%) were obtained, confirming that the active compound contained in the water phase was efficiently entrapped in the formed vesicles.

INTRODUCTION

Liposomes are formed when phospholipids spontaneously self-assemble into vesicles in the presence of water, producing microscopic aqueous droplets surrounded by a lipidic membrane (Castor, 2005); they can contain hydrophilic active principles dissolved in the water phase or hydrophobic compounds in the space between layers, when multilayer vesicles are formed. Liposomes diameter can range from about 100 nm to several microns (Lesoin et al.,

2011a); they can be used as drug carriers or to improve drug bioavailability (Gortzi et al., 2007; Joshi and Müller, 2009; Mohanraj et al., 2010).

Common technologies, used to produce liposomes, consist of several preparation steps yielding low batch-to-batch uniformity; in several cases, low encapsulation efficiencies are also reported (Drulis-Kawa and Dorotkiewicz-Jach, 2010; Massing et al., 2008).

In the field of particle formation and production of delivery vehicles, supercritical fluid technologies can overcome several limitations of conventional processes, such as the extensive use of organic solvents, high operating temperatures and mechanical stresses that can degrade labile compounds. Moreover, supercritical fluid technologies can offer a better control over the morphology of products at micrometric and nanometric scale; therefore, they have been proposed as solvents, antisolvents, and processing media in many processes related to pharmaceutical and biomedical compounds (Campardelli et al., 2012b; Reverchon et al., 2009a; Reverchon et al., 2008). Recently, some techniques based on the use of supercritical CO_2 ($scCO_2$) have been proposed also for liposomes preparation (Badens et al., 2001; Cano-Sarabia et al., 2008; Frederiksen et al., 1997; Lesoin et al., 2011a; Meure et al., 2008; Otake et al., 2001); they tried to take the advantage of the enhanced mass transfer of supercritical fluids (Meure et al., 2009) and can be roughly divided in two categories: (a) *two steps processes* in which the dried lipid particles need to be, then, rehydrated (Badens et al., 2001; Kadimi et al., 2007; Kunastitchai et al., 2006; Lesoin et al., 2011c; Li et al., 2008b; Xia et al., 2011); (b) *one step*

processes in which a liposome water suspension is directly obtained at the end of the process (Castor and Chu, 7 lug 1998, US5776486 A).

Two steps processes use a phospholipid organic solvent solution (as a rule in ethyl alcohol), that is continuously sprayed into supercritical CO_2, used to extract the organic solvent. This contact leads to a rapid supersaturation of the solution that causes the fast nucleation and consequent, formation of dried lipid particles (Reverchon et al., 2009a; Yeo and Kiran, 2005). Phospholipidic particles have to be subsequently rehydrated to produce liposomes. This kind of processes show some drawbacks related to the control of particles dimension and distribution and also shows very low encapsulation efficiencies (ranging around 10-20%)(Lesoin et al., 2011b); indeed, the solution used to rehydrate liposomes also contains the drug to be encapsulated and only a small part of it is effectively entrapped in the lipidic bilayer.

In the *one steps processes*, hydration of liposomes occurs under pressure (Otake et al., 2001; Otake et al., 2006b) or during the depressurization step (Frederiksen et al., 1997; Meure et al., 2009). Particularly, Otake *et al.* (Otake et al., 2001), developed a process named Supercritical Reverse Phase Evaporation (scRPE) in which phospholipids are mixed under constant stirring with $scCO_2$ and ethanol (used as co-solvent) in a variable volume cell, operated at constant pressure and temperature, at values usually higher than the lipids phase transition. After the equilibrium is reached, water is slowly introduced into the system and, then, the pressure is rapidly released. Liposomes with diameters ranging from 0.1 to 1.2 μm were obtained, with an encapsulation efficiency of 25% for glucose, in the water phase, and 63% for cholesterol, in

the organic phase. The same authors (Otake et al., 2006b) also reported a different process, derived from the scRPE, that produces inhomogeneous mixture of phospholipids and aqueous solution (named IscRPE) into carbon dioxide using a variable volume cell magnetically stirred. Liposomes with a mean diameter of 1.5 μm were formed in this case. scRPE and IscRPE processes have the advantage of producing liposomes in one step; but, they still have a batch layout and do not guarantee a good control of size and distribution of liposomes. Indeed, they use a decompression step from supercritical conditions to produce the strong mixing of the lipids and water phase, that promotes liposomes formation (Castor and Chu, 7 lug 1998, US5776486 A); the low reproducibility of the decompression/mixing process can generate liposomes with a different batch to batch size distribution.

Meure *et al.*(Meure et al., 2009) reported another process named *Depressurization of an Expanded Solution into Aqueous Media* (DESAM). In this case, the phospholipids are initially dissolved in an organic solvents and, then, CO_2 is added to the system to obtain an expanded lipid solution that is atomized through a nozzle into a heated aqueous medium, at room pressure. *Frederiksen et al.*(Frederiksen et al., 1997) reported a similar *one step* process with the direct generation of a phospholipids/organic solvent/CO_2 mixture into a high pressure vessel, that was, then, expanded into a water phase. The liposomes produced using the depressurization of an expanded liquid mixture in a water solution, showed a bimodal distribution with mean diameters of 50 and 250 nm. Furthermore, encapsulation efficiency studies were not performed; considering that liposome were formed in a water bath, in which the drug should

be dissolved, the expected encapsulation efficiency is low, because only a small part of the water solution will be entrapped by the lipidic layer; whereas, the remaining major part of the solution will remain in the continuous phase.

Considered the large limitations indicated for the previous processes, used to produce liposomes with the aid of supercritical fluids, in this work a new continuous supercritical CO_2 based process is proposed, named Supercritical Assisted Liposome formation (SuperLip), that tries to overcome the previous described limitations. Differently from the previously proposed processes, we tried to produce first water based micro and nanodroplets and then, the liposomes were formed around them. Water droplets produced by atomization into an expanded liquid mixture formed by lipid compounds + ethanol + CO_2 were used. The basic idea is that lipids contained in the expanded liquid can spontaneously and rapidly organize in a layer around the water droplets in the high pressure vessel. In this way liposomes of controlled dimensions could be formed with high encapsulation efficiencies. SuperLip feasibility tests are performed and process parameters are varied, to explored their effect on liposome size distribution and stability, to validate the process and to understand the mechanisms involved in liposomes formation. Preliminary encapsulation tests are also performed using bovine serum albumine (BSA) as a model protein, to verify the encapsulation efficiency of a water soluble compound and give a confirmation about the hypothesized mechanism of liposomes formation.

MATERIALS, METHODS AND APPARATUS

Materials

Soybean phosphatidylcholine (Soy PC) was purchased from Lipoid (Ludwigshafen, Germany). Ethanol (≥ 99.5%) was obtained from Sigma-Aldrich (Milan, Italy) and CO_2 (>99.4% purity) was provided by SON (Naples, Italy). Distilled water was used throughout all the formulations. Trifluoroacetic acid (TFA 99%; Carlo Erba Reagents; Milan, Italy), Bovine serum albumin (BSA lyophilized powder ≥98%; Sigma-Aldrich; Milan, Italy) and HPLC grade acetonitrile (Carlo Erba Reagents; Milan, Italy) were also used. All the compounds were used as received.

SuperLip apparatus layout

A schematic representation of the SuperLip apparatus is reported in Figure 1. It consists of three feed lines that deliver compressed CO_2 and ethanolic solution to the saturator, and water solution to the high pressure vessel. CO_2 is pumped from a reservoir using a Lewa Eco flow pump (mod. LDC-M-2, max, Germany). The ethanolic solution containing phospholipids (0.16 mg mL^{-1}) and the water solution were pumped using two Gilson pumps (Model 305, Gilson, France). CO_2 and ethanolic solution, with a gas to liquid ratio (GLR) of 2.42 (w/w), were continuously delivered the saturator that is a high pressure static mixer (internal volume 0.15 dm^3) packed with stainless steel perforated saddles and heated by thin band heaters. The high pressure mixing produced an expanded liquid; i.e., a liquid solution containing high quantities of dense CO_2, that was, then, delivered through a capillary tube (8 cm length, 1/8 in external diameter, 0.028 in. wall thickness) inside the high

pressure vessel. In the same vessel, water was continuously sprayed in a co-current mode through a nozzle (80, 180 and 1000 μm diameter). Water atomization in the high pressure vessel, filled by an expanded liquid, produces small sub-micronic water droplets that are the basis for the formation of liposomes, when they contact lipids contained in the ethanolic solution. The high pressure vessel is a stainless steel tank with an internal volume of 0.5 dm^3. The apparatus, depicted in Figure 7.2.1, also uses a stainless steel separator working at low pressures and located downstream the high pressure vessel, where CO_2 is released. CO_2 flow rate was measured by a rotameter ASA (mod. N.5-2500, Italy). Mixer operating conditions were chosen according to the high-pressure vapor-liquid equilibrium of the CO_2-ethanol binary system (Secuianu et al., 2008).

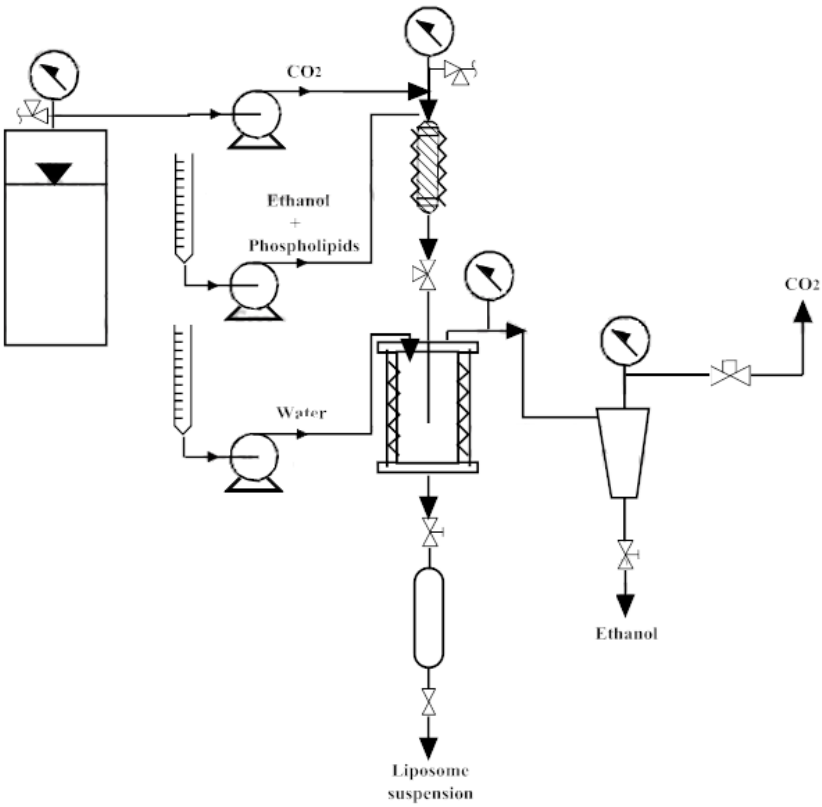

Figure 7.2.1 - Schematic representation of the SuperLip process layout.

The process consists of a first step in which, feeding CO_2 to the plant, the operative pressure, temperature and gas mass flow conditions are reached in the saturator and in the vessel; then a fixed volume (50 mL) of distilled water is delivered to the vessel to form a pool at the bottom of the vessel that receives the liposomes to form the final suspension. Distilled water is refilled during the experiment after each discharge of liposomes suspension from the bottom of the precipitator to maintain constant the liquid. At the end of this preparatory procedure, the ethanolic phospholipidic solution is fed to the saturator together with high pressure CO_2. As a consequence, an expanded liquid mixture is formed and is, then, delivered to the precipitation vessel where steady state compositions are obtained, a water solution (or distilled water in the experiments for empty liposomes formation) is atomized in the vessel and the droplets come in contact with the surrounding high pressure expanded liquid. Liposomes are formed on the fly and fall at the bottom of the vessel in the bulk of water. Liposomes suspension is collected at fixed time intervals into a reservoir located downstream the high pressure vessel using an on-off valve. Experiments could also been performed in batch mode, opening the on-off valve only one time at the end of the process. All the experiments were performed in triplicate.

Liposomes characterizations: morphology and size distribution

The morphology of the produced liposomes was studied using a Field Emission-Scanning Electron Microscope (FE-SEM mod. LEO 1525; Carl Zeiss

SMT AG, Oberkochen, Germany). Samples were prepared adding small droplets of the colloidal suspension over aluminium stubs, air-dried and coated with Chrome (layer thickness 150 Å) using a turbo sputter coater (model K575X, EmiTech Ashford, United Kingdom).

Particles size distribution (PSD) and zeta potential of the liposome suspensions were measured using a Malver Zeta Sizer laser scattering instrument (mod. Zetasizer Nano S, United Kingdom). 1 mL of the produced suspension was used for each test, without any further dilution step. Liposome suspension stability tests were performed measuring periodically, every week, PSD and zeta potential of the suspensions during one month of storage at 4°C.

The amount of BSA loaded into the liposomes was measured by dissolving 1 mL of liposome suspension in 600 µL of acetonitrile in centrifuge tubes that were sonicated until complete transparency. Then, 1400 µL of water containing 0.1% Trifluoroacetic acid (TFA, 0.1% aqueous solution) were added to the sonicated mixture to dissolve BSA completely. Then, remaining undissolved lipids were separated by centrifugation at 2000 rpm for 2 min. The clear supernatant was withdrawn, and protein concentration in the resulting clear solution was directly analyzed at room temperature by HPLC (model 1200 series; Agilent Technologies Inc., Italy) equipped with a LiCrosphere C18 column (250 mm × 4.6 mm), packed with 5 µm particles of 100 Å pore size, according to methods previously reported (Falco et al., 2012). The amount of measured BSA was then converted in the effective content of BSA loaded into liposomes using a calibration curve. The encapsulation efficiency (EE) is the

ratio between the total amount of BSA effectively loaded and the nominal (starting) one.

RESULTS AND DISCUSSION

Pressure and temperature conditions exploration

SC-CO_2 shows a relevant affinity with almost all the organic solvents: the corresponding pressure-composition diagrams are characterized by a miscibility hole (two phase system) with a characteristic maximum that is called mixture critical point (MCP). Above the pressure of the MCP and on the right of this point, the mixture is at supercritical conditions. The single phase region on the left of the MCP in which the liquid solvent can solubilise large quantities of CO_2, is commonly called the expanded liquid region. Expanded liquids are characterized by a reduced surface tension, that at high gas molar fractions is near to zero (Brunner, 1994a). This characteristic improves the mixing between the droplets and the surrounding expanded liquid that leads to liposome formation. For this reason, operating parameters such as pressure, temperature and molar fraction in the precipitator, inducing the formation of an expanded CO_2-ethanol mixture, were selected, operating largely above the mixture critical point (MCP) of the system that is (located at about 98 bar at 70°C (Secuianu et al., 2008)) and on the right of the MCP itself.

The first set of experiments was performed to form empty liposomes. Temperatures inside the vessel and the mixer, were set at 70°C and vessel and mixer pressure were varied from 125 to 175 bar. The nozzle used for water

atomization had 80 μm internal diameter and water flow rate was fixed at 10.0 mL/min. The w/w gas/liquid ratio (GLR) in the saturator was fixed at 2.42 with the following flow rates: 6.7 g/min for the CO_2, 3.5 mL/min for phospholipids ethanolic solution. Operating at these conditions a carbon dioxide molar fraction of 0.71 was obtained in the precipitator.

Table 7.2.1 reports the mean diameter of the liposomes produced by SuperLip operating at different pressures. Liposome mean diameter varied between 294 (±144) nm and 128 (±105) nm, when the pressure was varied from 125 and 175 bar. Therefore, according to these results, the higher was the pressure, the smaller were the liposomes formed. The effect of pressure on liposomes mean size can be explained with an increase of the expanded liquid density that favors atomization of water injected in the high pressure vessel (Caputo et al., 2010). The generation of smaller water droplets, consequently, leads to the decrease of liposomes diameter. For example, a FESEM image of liposomes morphology obtained at 125 bar, 70°C, GLR 2.42 is reported in Figure 7.2.2.

Table 7.2.1 - Liposomes size distribution. Process conditions: CO_2 flow rate 6.7 g/min, GLR 2.42, water flow rate 10 mL/min, nozzle diameter 80 µm.

Mixer & Vessel T(°C)	Mixer & Vessel p(bar)	CO_2 density ($kg.m^{-3}$)	Mean size (nm ± SD)
70	125	378	294±144
70	150	510	208±105
70	175	600	128±61
40	100	625	264±66
40	125	730	174±69
40	175	815	130±62

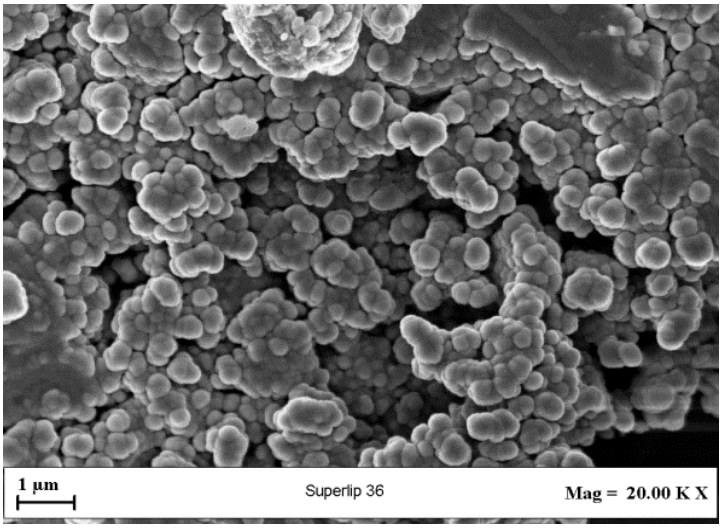

Figure 7.2.2 - SEM image of liposomes produced using SuperLip at 125 bar, 70°C, GLR 2.42.

The same set of experiment was repeated operating at a lower temperature, (40°C in the precipitator and in the mixer). In these cases, liposomes mean diameter varied between 264 (±66) and 130 (±62) nm when the pressure was increased from 100 and 175 bar. Probably, the further increase of SC-expanded liquid density, obtained reducing the operative temperature, produced smaller water droplets due to larger jet disruptive forces due to the impact of the water jet with a denser fluid phase. Smaller water droplets, in turn, generated smaller liposome. The effect of temperature is also reported in Figure 7.2.3, where mean liposome diameters are plotted against pressure. These curves confirm an evident trend: the lower is the mixer and vessel temperature and the higher is the pressure of the mixer (i.e. higher expanded liquid density), the smaller are liposomes produced.

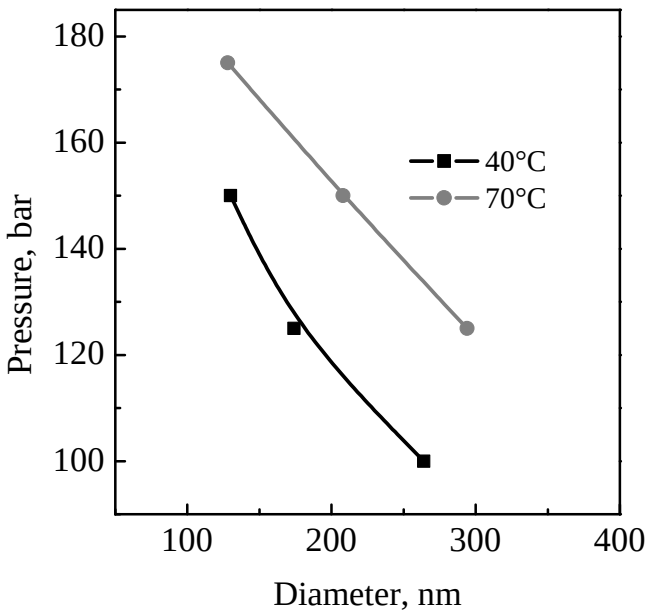

Figure 7.2.3 - Effect of pressure on liposome diameters at two different temperatures.

At all conditions tested, stable liposome suspensions were produced with average zeta potentials ranging between -20 and -30 mV, these values indicate that the suspensions produced are stable. PSD analysis and zeta potential measurements were periodically repeated during one month of storage at 4°C (every week), confirming that distribution of liposomes diameters was maintained over the time. No significant variation of PSD was noticed during the observation time: it allows to exclude phenomena of suspension instability, like aggregation and sedimentation.

Effect of nozzle diameter

Atomization processes are governed by some dimensionless parameters like Reynolds number, Ohnesorge number and Weber number. Thus statement is obviously true also in the case of supercritical fluids related processes (De

Marco et al., 2012). More specifically speaking, fixed all the other atomization parameters, the smaller is nozzle diameter, the smaller are the droplets produced. Therefore, if the dimensions of liposomes produced during SuperLip depend on the diameter of water droplets, nozzle diameter, nozzle diameter should play a relevant role in determining liposome dimensions. To verify if this hypothesis can be applied to SuperLip, different nozzle diameters (80, 180 and 1000 μm) were tested for water injection into the high pressure vessel. All the experiments were performed at 100 bar and at 40°C; flow rates were fixed as in the previously described experiments.

As it can be seen in Table 7.2.2, only the smallest nozzle diameter (80μm) induced the formation of very small liposomes with a unimodal distribution curve; whereas, using nozzle diameters of 180 and 1000 μm larger liposomes were obtained and bimodal distribution curves were observed. To quantify this observation PSDs of liposome suspensions obtained using 80 μm and 1000 μm nozzle are compared in Figure 4. When 1000 μm nozzle was used, Figure 4 shows the presence of two populations of liposomes: one with dimensions largely submicrometric and a second one characterized by diameters between approximately 1.5 and 3.5μm.

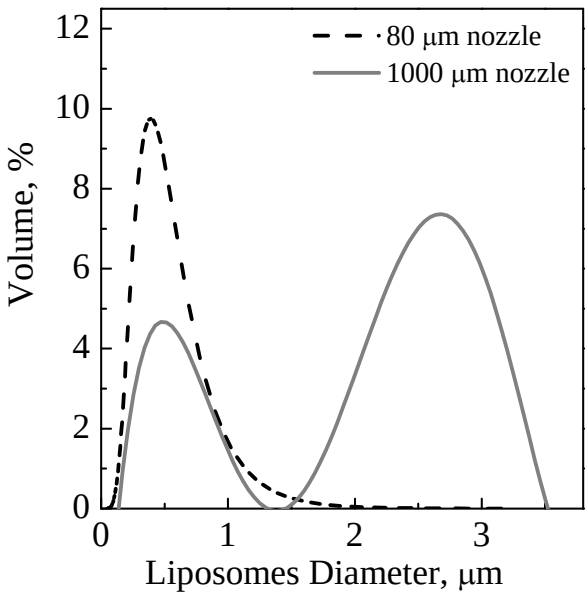

Figure 7.2.4 - PSDs of liposome suspensions produced using different nozzle diameters, GLR 2.42, temperature 40°C, pressure 100 bar.

Bimodal liposome distributions obtained using the largest nozzle in this work can be explained considering that in SuperLip unilamellar vesicles are predominantly formed. It is reported in the literature that unilamellar liposome structure are more stable in the range of dimensions comprised between 100-500 nm (Ulrich, 2002). Using the larger nozzle diameters, larger water droplets are generated in the precipitation vessel, that consequently lead to the formation of larger liposomes, these less stable structures can spontaneously partly rearrange in submicrometic structures generating a second population of liposomes with smaller dimensions (about 16.5%, see Table 7.2.2).

Table 7.2.2 - Size distribution of liposomes produced using different nozzle diameters at a pressure of 100 bar, temperature of 40°C, CO_2 flow rate 6.7 g/min, GLR 2.42, water flow rate 10 mL/min.

Nozzle diameter (μm)	PSD	Mean size (nm ± SD)
80	Unimodal	264 ± 66
180	Bimodal	545 ± 69.31 (83.4%); 174 ± 62.50 (16.6%)
1000	Bimodal	620.90 ± 114.50 (83.6%); 89.64 ± 21.64 (16.4%)

Effect of the depressurization step

As reported in the scientific literature analyzed in the introduction, lipids can organize in layers around liquid droplets also as a consequence of a mixing step induced by decompression (Badens et al., 2001; Castor, 2005); As previously discussed, processes based exclusively on the decompression of the supercritical fluid or the expanded liquid mixture, suffer of low reproducibility (Otake et al., 2001; Otake et al., 2006b) and are difficult to scale up. In the SuperLip process, decompression occurs during the recovery of the suspension, when the valve is periodically opened to withdraw the suspension at atmospheric pressure. Therefore, it should be possible that, during sample recovery, a rearrangement of the liposomes structure and size could take place. To understand if the final decompression step has an influence on liposomes size and distribution, an experiment was performed eliminating the periodic decompression for suspension recovery from the high pressure vessel and at the end of the run; in this test the vessel was slowly depressurized. This

experiment was performed at 125 bar and 70°C. The liposome size distribution obtained in this case is reported in Figure 7.2.6 (dashed curve). Another experiment, operating at the same process conditions, was performed, inducing a forced decompression of the suspension at the end of the run. The liposome size distribution obtained in this second test is also shown in Figure 7.2.5 (continuous curve). The analysis of these distributions shows that forced decompression at the end of the process only slightly influences liposomes PSD. Indeed, the liposomes generated in that case present only a relatively smaller diameter (307±93 nm) than the ones produced during the standard SuperLip test (358±130 nm). These results confirm that, during SuperLip, liposome formation occurs inside the precipitation vessel, differently from the other techniques where liposomes are produced during the depressurization (Frederiksen et al., 1997; Meure et al., 2009). Therefore, water based droplets are rapidly surrounded by lipids layer dissolved in the expanded liquid and liposomes are formed that present a diameter similar to the one of the droplets. At the end of this very fast process, droplets fall in the continuous water phase at the bottom of the vessel, maintaining their identity as liposomes. The forced decompression at the end of the run induces an additional mixing, producing only a small liposomes rearrangement towards smaller diameters, according to the natural tendency of these emulsions.

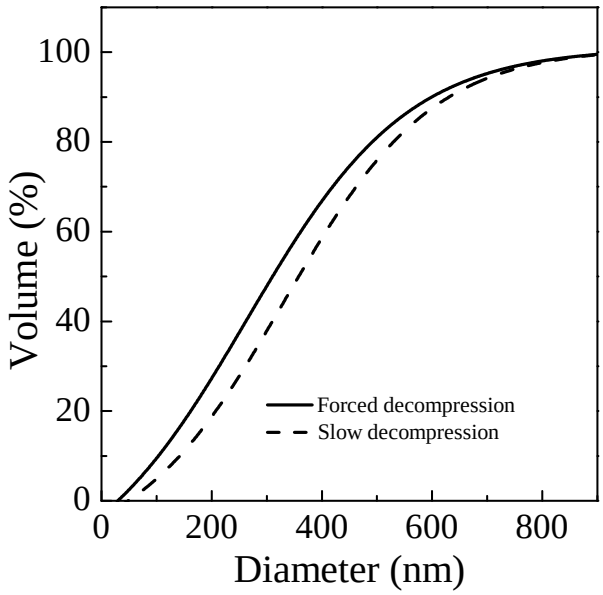

Figures 7.2.5 and 7.2.6. Effect of precipitator decompression on liposome size distribution.

Effect of the tube length

Although we have indicated that in SuperLip liposomes are formed inside the high pressure vessel, it was still possible that part of the process occurred on the fly in consequence of interaction between expanded liquid and atomized water droplets and part of liposomes were formed as a result of the mixing of the expanded liquid with the bulk of water located at the bottom of the vessel. To better understand this issue, the length of the capillary tube that feeds the expanded liquid from the saturator into the high pressure vessel, was varied from 8 to 20 cm. In the first case the tube was completely out of the bulk of water; whereas, in the second case expanded liquid was injected directly in the water bulk. The other process parameters were 100 bar 40°C mixer and vessel conditions, 80 μm nozzle diameter. The results of these experiments are summarized in Table 7.2.3. It can be noted that the liposomes formed using the

20 cm length capillary presented a bimodal distribution, characterized by large liposomes (602±81.24 nm) in high percentage (74.1%) and small liposomes that, however, represent a small quantity of the produced suspension. Again the mixing spontaneously induced the formation of liposomes, but, their dimensions were larger than in SuperLip. The process with the longer capillary, moreover, resembles one of those discussed in the literature and low encapsulation efficiency are expected (Meure et al., 2009).

Table 7.2.3 - Size of liposomes produced varying the length of the capillary tube. Pressure 100 bar, temperature 40°C, CO_2 flow rate 6.7 g/min, GLR 2.42, water flow rate 10 mL/min and nozzle diameter 80 µm

Tube length (cm)	Mean size (nm ± SD)
8	264± 66
20	620.70 ± 81.24 (74.1%); 150.67 ± 25.21 (25.9%)

In conclusion the experimental evidences seem to indicate that in SuperLip liposomes are formed as a consequence of favorable interactions between the expanded liquid phospholipid mixture with the atomized water droplets: liposomes are formed on the fly before falling at the bottom of the vessel in a receiving water phase. A pictorial representation of the hypothesized mechanism of liposome formation during SuperLip in shown in Figure 7.2.7.

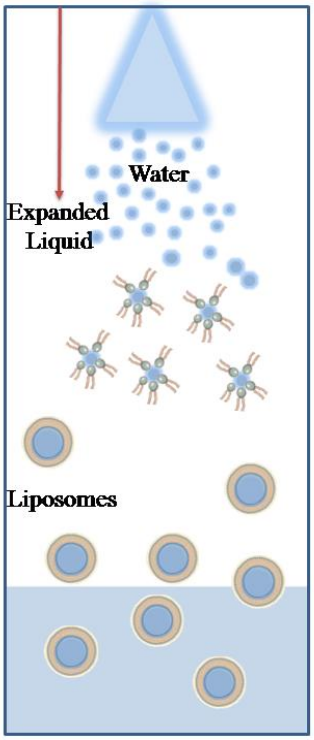

Figure 7.2.7 - A schematic representation of the mechanism proposed for liposomes formation in SuperLip process

Encapsulation efficiency

To demonstrate the efficiency and the potential improvement of encapsulation efficiency of hydrosoluble drugs using *SuperLip* process, some experiments were performed loading BSA in the water phase to be atomized and the encapsulation efficiency (EE) of the formed liposomes was measured. The theoretical loading was 1.7 % w/w of the lipid weight, corresponding to the composition of the water solution injected in the precipitator. Experiments were performed (in triplicates) at the operative conditions of: 125 bar, 40 °C, nozzle diameter 80 µm, and tube length 8 cm. Liposomes with an average diameter of 193 ± 77 nm were obtained. These tests showed a high encapsulation efficiency (85-90%), confirming the hypothesis of high efficiency in the

entrapment of hydrophilic compounds, thanks to the direct formation of liposomes around the water solution containing BSA.

CONCLUSIONS

Supercritical fluid based techniques to produce liposomes, described in the literature are characterized by a batch process layout and low or problematic encapsulation efficiencies. In general, discontinuous methods show a limitation in their reproducibility, which is a serious drawback in the process scale-up. The *SuperLip* process proposed in this work, has the advantage of a continuous and enhanced mixing between the SC-expanded liquid and the water phase atomized in the high pressure vessel (Campardelli et al., 2012a). This process allows a spontaneous organization of these lipids in liposomes, showing a unimodal submicronic PSD that should be more efficient from a pharmaceutical point of view than the bimodal, prevalently micrometric, distributions obtained using other process arrangements. The fact that the liposomes are formed on the fly is another advantage of this process, since it offers higher encapsulation efficiency, because the active compound contained in the water solution is efficiently entrapped in the formed vesicles.

Further studies are needed to investigate more complex loading of liposomes with different kind of active compounds.

REFERENCES

[1] T.P. Castor, Phospholipid nanosomes, Curr Drug Deliv, 2 (2005) 329-340.

[2] L. Lesoin, O. Boutin, C. Crampon, E. Badens, CO_2/water/surfactant ternary systems and liposome formation using supercritical CO_2: a review, Colloids and Surfaces A: Physicochemical and Engineering Aspects, 377 (2011) 1-14.

[3] V.J. Mohanraj, T.J. Barnes, C.A. Prestidge, Silica nanoparticle coated liposomes: a new type of hybrid nanocapsule for proteins, Int J Pharmaceut, 392 (2010) 285-293.

[4] M.D. Joshi, R.H. Müller, Lipid nanoparticles for parenteral delivery of actives, Eur J Pharm Biopharm, 71 (2009) 161-172.

[5] O. Gortzi, S. Lalas, I. Chinou, J. Tsaknis, Evaluation of the antimicrobial and antioxidant activities of *Origanum dictamnus* extracts before and after encapsulation in liposomes, Molecules, 12 (2007) 932-945.

[6] Z. Drulis-Kawa, A. Dorotkiewicz-Jach, Liposomes as delivery systems for antibiotics, Int J Pharmaceut, 387 (2010) 187-198.

[7] U. Massing, S. Cicko, V. Ziroli, Dual asymmetric centrifugation (DAC) - a new technique for liposome preparation, J Control Release, 125 (2008) 16-24.

[8] R. Campardelli, G. Della Porta, E. Reverchon, Solvent elimination from polymer nanoparticle suspensions by continuous supercritical extraction, The Journal of Supercritical Fluids, 70 (2012) 100-105.

[9] E. Reverchon, R. Adami, S. Cardea, G. Della Porta, Supercritical fluids processing of polymers for pharmaceutical and medical applications, J Supercrit Fluid, 47 (2009) 484-492.

[10] E. Reverchon, S. Cardea, E. Schiavo Rappo, Membranes formation of a hydrosoluble biopolymer (PVA) using a supercritical CO2-expanded liquid, J Supercrit Fluid, 45 (2008) 356-364.

[11] L.A. Meure, N.R. Foster, F. Dehghani, Conventional and dense gas techniques for the production of liposomes: a review, AAPS PharmSciTech, 9 (2008) 798-809.

[12] L. Frederiksen, K. Anton, P.v. Hoogevest, H. Keller, H. Leuenberger, Preparation of liposomes encapsulatins water-soluble compounds using supercritical carbon dioxide, J Pharm Sci-Us, 86 (1997) 921-928.

[13] K. Otake, T. Imura, H. Sakai, M. Abe, Development of a new preparation method of liposomes using supercritical carbon dioxide, Langmuir, 17 (2001) 3898-3901.

[14] E. Badens, C. Magnan, G. Charbit, Microparticles of soy lecithin formed by supercritical processes, Biotechnology and Bioengineering, 72 (2001) 194-204.

[15] M. Cano-Sarabia, N. Ventosa, S. Sala, C. Patiño, R. Arranz, J. Veciana, Preparation of uniform rich cholesterol unilamellar nanovesicles using CO_2-expanded solvents, Langmuir, 24 (2008) 2433-2437.

[16] L.A. Meure, R. Knott, N.R. Foster, F. Dehgani, The depressurizationof an expanded solution into aqueous media for the bulk production of liposomes, Langmuir, 25 (2009) 326-337.

[17] L. Lesoin, C. Crampon, O. Boutin, E. Badens, Preparation of liposomes using the supercritical anti-solvent (SAS) process and comparison with a conventional method, J Supercrit Fluid, 57 (2011) 162-174.

[18] F. Xia, H. Jin, Y. Zhao, X. Guo, Supercritical antisolvent-based technology for preparation of vitamin D_3 proliposome and its characteristics, Chinese Journal of Chemical Engineering, 19 (2011) 1039-1046.

[19] S. Kunastitchai, L. Pichert, N. Sarisuta, B.W. Müller, Application of aerosol solvent extraction system (ASES) process for preparation of liposomes in a dry and reconstitutable form, Int J Pharmaceut, 316 (2006) 93-101.

[20] U.S. Kadimi, D.R. Balasubramanian, U.R. Ganni, M. Balaraman, V. Govindaraiulu, In vitro studies on liposomal amphotericin B obtained by supercritical carbon dioxide-mediated process, Nanomedicine: Nanotechnology, Biology and Medicine, 3 (2007) 273-280.

[21] Y. Li, D.-J. Yang, S.-L. Chen, S.-B. Chen, A.S.-C. Chan, Process parameters and morphology in puerarin, phospholipids and their complex microparticles generation by supercritical antisolvent precipitation, Int J Pharmaceut, 359 (2008) 35-45.

[22] T.P. Castor, L. Chu, Methods and apparatus for making liposomes containing hydrophobic drugs, in, 7 lug 1998, US5776486 A.

[23] S.-D. Yeo, E. Kiran, Formation of polymer particles with supercritical fluids: a review, J Supercrit Fluid, 34 (2005) 287-308.

[24] L. Lesoin, C. Crampon, O. Boutin, E. Badens, Development of a continuous dense gas process for the production of liposomes, J Supercrit Fluid, 60 (2011) 51-62.

[25] K. Otake, T. Shimomura, T. Goto, T. Imura, T. Furuya, S. Yoda, Y. Takebayashi, H. Sakai, M. Abe, Preparation of liposomes using an improved

supercritical reverse phase evaporation method, Langmuir, 22 (2006) 2543-2550.

[26] C. Secuianu, V. Feroiu, D. Geana, Phase behavior for carbon dioxide + ethanol system: experimental measurements and modeling with a cubic equation of state, J Supercrit Fluid, 47 (2008) 109-116.

[27] N. Falco, E. Reverchon, G. Della Porta, Continuous Supercritical Emulsions Extraction: Packed Tower Characterization and Application to Poly(lactic-co-glycolic Acid) plus Insulin Microspheres Production, Ind Eng Chem Res, 51 (2012) 8616-8623.

[28] G. Brunner, Gas extraction, Springer Verlag, New York, 1994.

[29] G. Caputo, R. Adami, E. Reverchon, Analysis of Dissolved-Gas Atomization: Supercritical CO2 Dissolved in Water, Ind Eng Chem Res, 49 (2010) 9454-9461.

[30] I. De Marco, O. Knauer, F. Cice, A. Braeuer, E. Reverchon, Interactions of phase equilibria, jet fluid dynamics and mass transfer during supercritical antisolvent micronization: The influence of solvents, Chemical Engineering Journal, 203 (2012) 71-80.

[31] A.S. Ulrich, Biophysical aspects of using liposomes as delivery vehicles, Bioscience reports, 22 (2002) 129-150.

[32] R. Campardelli, R. Adami, G. Della Porta, E. Reverchon, Nanoparticle precipitation by supercritical assisted injection in a liquid antisolvent, Chemical Engineering Journal, 192 (2012) 246-251.

Liposome preparation using a new supercritical fluid assisted continuous process

Islane Espirito Santo[a], Roberta Campardelli[b], Elaine Cabral Albuquerque[a], Silvio Vieira de Melo[a], Giovanna Della Porta[b], Ernesto Reverchon[b,*]

[a] *PEI, Industrial Engineering Program, Department of Chemical Engineering, Federal University of Bahia, Rua Prof. Aristides Novis, 2, Federação, 40210-630, Salvador (BA), Brazil*

[b] *Department of Industrial Engineering, University of Salerno, Via Giovanni Paolo II,132 Fisciano (SA) 84084, Italy*

*Ernesto Reverchon Tel.: +39 089964116; Fax: +39 089964057; ereverchon@unisa.it

ABSTRACT

Liposomes are formed by phospholipids that spontaneously generate vesicles as a consequence of their interactions with water. In this work, a new continuous supercritical fluid process, named Supercritical Assisted Liposome formation (SuperLip), is proposed to prepare liposomes of controlled submicrometric size. Water droplets are produced by atomization inside a high pressure vessel, filled with an expanded liquid mixture formed by phospholipids/ethanol/Carbon dioxide (CO_2). These droplets are rapidly surrounded by a lipid layer and liposomes are formed when they fall in the

water pool located at the bottom of the vessel. Liposomes with controlled dimensions and high encapsulation efficiency, containing water soluble drugs, can be generated. Experiments have been performed varying process operating parameters like pressure and temperature, producing liposomes of soybean phosphatidylcholine (PC) of different size and distribution ranging between 130 ± 62 nm and 294 ± 144 nm. The results demonstrated that atomized liquid droplets are transformed efficiently into liposomes. Also phosphatidylglycerol (PG) had been used coupled with PC to produce liposomes. PC/PG larger liposomes have been produced in this case ranging between 442 ± 110 nm and 209 ± 72 nm. Drug encapsulation feasibility tests were also performed using bovine serum albumin (BSA) and insulin, used as proteins model; high encapsulation efficiencies (70 ÷ 90%) were obtained, confirming that the active compounds contained in the water phase were efficiently entrapped in the formed vesicles. Furthermore, recovery tests with chitosan were also performed. The zeta potential of produced liposomes changed from -37 mV to 3 mV, demonstrating that this biopolymer was able to coat the formatted liposomes.

INTRODUCTION

In recent years, therapeutic proteins and peptides have been target of intense investigation. One of these molecules is insulin, a protein that is administered via injection for the treatment of *diabetes mellitus*. The most physiological pathway for insulin administration is the oral route due to its

absorption in the intestines; however this protein is degraded by proteases presented in the alimentary canal. It also presents low enterocyte permeability (Khafagy et al., 2007; Salamat-Miller and Johnston, 2005; Sarmento, 2007).

So, due to these drawbacks, studies have been made with the association of insulin and liposomes. Liposomes are small lipid vesicles containing water suspended in a water based medium. They can be also defined as water in water (w/w) emulsions and can contain hydrophilic active principles dissolved in the water phase or hydrophobic compounds in the space between layers, when multilayer vesicles are formed (Castor and Chu, 1998). However, studies performed association of liposomes produced by conventional methods and insulin demonstrated that these formulations presented low encapsulation efficiency (Kisel et al., 2001). Furthermore, the results of insulin uptake encapsulated in conventional liposomes were not satisfactory, which led the adoption of polymeric coating of liposomes in order to improve the uptake (Degim et al., 2006; Shaji and Patole, 2008; Zhang et al., 2005).

Conventional technologies, used to produce liposomes, consist of several preparation steps yielding low batch-to-batch uniformity; in several cases, low encapsulation efficiencies are also reported (Drulis-Kawa and Dorotkiewicz-Jach, 2010; Massing et al., 2008). These methods require several steps to produce the vesicles and the utilization of large amount of organic solvents, impeding the scale-up of the processes. Furthermore, vesicles obtained from these methods presented low encapsulation efficiency of hydrophilic compounds. So, in the field of particle formation and

production of delivery vesicles, supercritical fluid technologies can overcome several limitations of conventional processes.

Recently, some techniques based on the use of supercritical CO_2 ($scCO_2$) have been proposed also for liposomes preparation (Badens et al., 2001; Cano-Sarabia et al., 2008; Frederiksen et al., 1997, Lesoin et al., 2011; Meure et al., 2008; Otake et al., 2001) ; they tried to take the advantage of the enhanced mass transfer of supercritical fluids (Meure et al., 2009) and can be roughly divided in two categories: (a) *two steps processes* in which the dried lipid particles need to be, then, rehydrated (Badens et al., 2001, Kadimi et al., 2007; Kunastitchai et al., 2006; Lesoin et al., 2011, Li et al., 2008; Xia et al., 2011) ; (b) *one step processes* in which a liposome water suspension is directly obtained at the end of the process (Castor and Chu, 1998).

These types of processes have some drawbacks related to the control of particles dimension and distribution and only batch or semi-continuous layout has been proposed. Furthermore, they show a common limitation from the point of view of the possibility of encapsulation of compounds (ranging around 10÷20%) because both in the one step processes and in the two step processes only a small part of the solution used to hydrate liposomes, that contains the drug to be entrapped, is effectively included in the lipidic bilayer.

In this work a new one step continuous supercritical CO_2 based process is proposed, named Supercritical Assisted Liposome formation (SuperLip). Differently from the previously proposed processes, we tried to produce first water based micro and nanodroplets and then, the liposomes were formed around them. Water solution droplets produced by atomization into an

expanded liquid mixture formed by lipid compounds + ethanol + CO_2 were used. The basic idea is that lipids contained in the expanded liquid can spontaneously and rapidly organize in a layer around the water droplets in the high pressure vessel. Since the droplets of the water solution will be entrapped by the lipid layer, liposomes of controlled dimensions could be formed with high encapsulation efficiencies in the water pool located at the bottom of the precipitator.

Tests have been performed using phosphatidylcholine (PC) and phosphatidylglycerol (PG); process parameters were varied, to explore their effect on liposome size distribution and stability, to validate the process and to understand the mechanisms involved in liposomes formation. Preliminary encapsulation tests were performed using two types of model proteins, bovine serum albumine (BSA) and insulin, to verify the encapsulation efficiency of a water soluble compound. Furthermore, coating tests using chitosan were also performed in order to verify the possibility of produce coated liposomes entrapping a protein model in a single step process.

MATERIALS AND METHODS

Materials

Soybean phosphatidylcholine (Soy PC) and phosphatidylglycerol (PG) were purchased from Lipoid (Ludwigshafen, Germany). Ethanol (≥ 99.5%) was obtained from Sigma-Aldrich (Milan, Italy) and CO_2 (>99.4% purity) was provided by SON (Naples, Italy). Trifluoroacetic acid (TFA 99%;

Carlo Erba Reagents; Milan, Italy), Bovine serum albumin (BSA lyophilized powder ≥98%; Sigma-Aldrich; Milan, Italy), Human Insulin (lyophilized powder; Novo Nordisk, Montes Claros, Brazil), Chitosan (Sigma-Aldrich, Sao Paulo, Brazil) and HPLC grade acetonitrile (Carlo Erba Reagents; Milan, Italy) were also used. All the compounds were used as received.

SuperLip apparatus layout

A schematic representation of the apparatus is depicted in Figure 7.3.1. It consists in three fed lines that deliver compressed CO_2 and ethanol solution to the saturator, and water to a high pressure chamber. CO_2 is pumped from a reservoir using a Lewa Ecoflow pump (mod. LDC-M-2, max. pressure 400 bar). Ethanol + phospholipids solution (0.16 $mg.mL^{-1}$) and water (BSA and insulin solution 0.02$mg.mL^{-1}$; chitosan solution presented 1:1 and 1:2 lipid:chitosan molar ratio) were pumped by two different Gilson pumps (Model 305, Gilson FR). CO_2 and ethanol solution were continuous delivered to a saturator where the formation of the expanded liquid takes place. It is, then, injected by a capillary tube (8 cm length) inside of a high pressure chamber. Water was continuously atomized through a nozzle (80 µm diameter) inside of a high pressure vessel. This atomization step is important to produce small sub-micronic water that are the basis for the formation of an emulsion, when they contacted lipids contained in the ethanolic solution. Liposomes suspension is collected at fixed time intervals into a reservoir located downstream the high pressure vessel using an on-off valve.

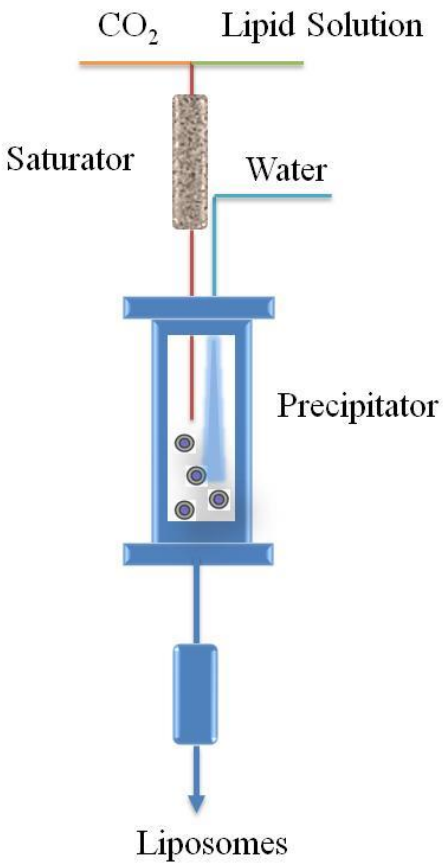

Figure 7.3.1 - Schematic representation of the SuperLip process layout.

Liposomes characterizations

The mean size (MD), polydispersion index (PDI) and zeta potentials of the liposomal preparations were measured by Laser Diffraction analyzer (DLS; Zeta Sizer Malvern Inc., Wocherstershire, UK) equipped with a 5.0 mW He-Ne laser operating at 633 nm. Measurements were made in at a temperature of 25 ºC and scattering angle of 173°.

Liposomes were observed at a field emission scanning electronical microscope (FESEM LEO 1525, Carl Zeiss SMT AG). Samples were prepared by adding droplets of the colloidal suspension over aluminum stubs, air-dried and sputter-coated with chrome (Agar Scientific, Stansted,

UK). The amount of protein models (BSA and insulin) loaded into the liposomes was measured by HPLC (model 1200 series; Agilent Technologies Inc., Italy) equipped with a LiCrosphere C18 column (250 mm × 4.6 mm), packed with 5 µm particles of 100 Å pore size, according to methods previously reported (Falco et al., 2012) . Briefly, 1 mL of liposome suspension was dissolved in 600 µL of acetonitrile in centrifuge tubes that were sonicated until complete transparency. Then, 1400 mL of water containing 0.1% Trifluoroacetic acid (TFA, 0.1% aqueous solution) were added to the sonicated mixture to dissolve the protein completely. The remaining undissolved lipids were separated by centrifugation at 2000 rpm for 2 min. The clear supernatant was withdrawn, and protein concentration in the resulting clear solution was directly analyzed at room temperature. The encapsulation efficiency (EE) is the ratio between the total amount of the protein effective loaded and the nominal (starting) one.

RESULTS

Pressure and temperature parameters

In the SuperLip process the principal step is the atomization of water droplets in the high pressure vessel filled with an expanded liquid mixture of lipid compounds + ethanol + CO_2.

Indeed, thanks to favorable interaction of phospholipids with water droplets a very fast formation of a lipidic layer around the atomized water based droplets is expected, forming w/CO_2 micelles. These layered droplets, continue

their flight and fall in the water pool located at the bottom of the precipitator, where the process of liposomes formation is completed as consequence of interaction with the receiving external water solution, i.e. w/w emulsion is formed. The first set of experiments was performed to form empty PC liposomes, and therefore, pure water was atomized. Temperature inside the vessel and the mixer, was set at 40°C and vessel and mixer pressure were varied from 100 to 150 bar. The nozzle used for atomization had 80 µm internal diameter and water flow rate was fixed at 10.0 mL/min. The w/w gas/liquid ratio (GLR) in the saturator was fixed at 2.42 with the following flow rates: 6.7 g/min for the CO_2, 3.5 mL/min for phospholipids ethanolic solution. Considering the high pressure phase equilibra data for the system CO_2-ethanol-water at 40°C and 100-200 bar pressure range, reported in Figure 7.3.2, the operative conditions selected ensure that the operative point, reported in the same figure, is located inside the immiscibility hole where water and expanded liquid phase are not miscible and a w/CO_2 emulsion can be formed.

Table 7.3.1 reports the mean diameter of the liposomes produced by SuperLip in these first experiments, operating at different pressures. Liposomes mean diameter varied between 264 (±66) and 130 (±62) nm when the pressure was increased from 100 and 150 bar. The effect of pressure on liposomes mean size can be explained with an increase of CO_2 density and consequently of expanded liquid mixture density (Pöhler and Kiran, 1997) (pure CO_2 density data under pressure are reported in Table 7.3.1, calculated using the Bender equation of state (Platzer and Maurer, 1989) that favors atomization of water injected in the high pressure vessel (Caputo et al., 2010). The generation of

smaller water droplets, consequently, leads to the decrease of liposomes diameter. A FESEM image of liposomes morphology obtained at 100 bar, 40°C, GLR 2.42 is reported in Figure 7.3.3.

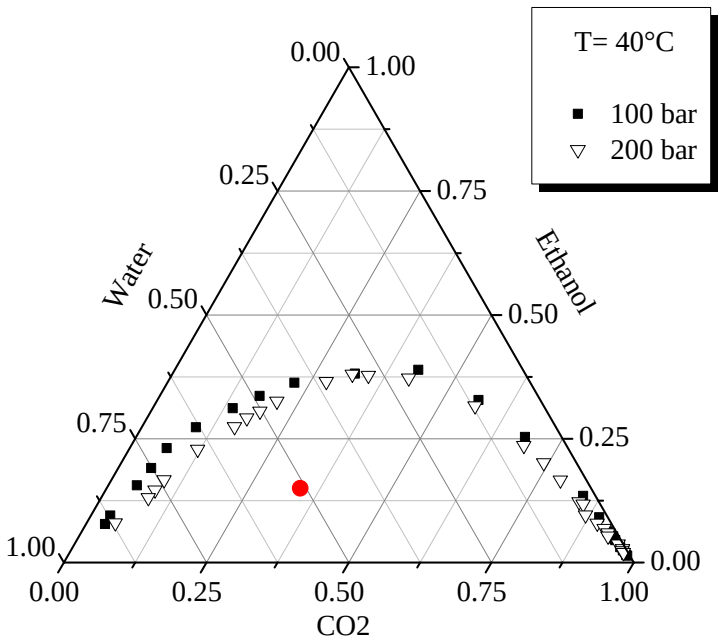

Figure 7.3.2 - Phase equilibria data for the CO_2-ethanol-water system at 40°C and 100÷200 bar pressure range, adapted from Durling et al. (2007). The position of the operative point for the experiments conducted at different pressure is also reported (red colored).

Table 7.3.1 - Liposomes size distribution. Process conditions: 40°C, CO_2 flow rate 6.7 g/min, GLR= 2.42, water flow rate 10 mL/min, nozzle diameter 80 µm.

Mixer & Vessel p(bar)	CO_2 density ($kg.m^{-3}$)	Mean size (nm ± SD)
100	625	264 ± 66
125	730	174 ± 69
150	815	130 ± 62

The same set of experiments at 40°C and at different precipitation vessel pressure was performed using a mixture of PC and PG in the weight ratio 9/1. In this case larger liposomes have been obtained, indeed liposomes mean diameter varied between 442 (±110) and 209 (±72) nm when the pressure was increased from 100 and 150 bar. The effect of the increasing pressure is again of reducing liposomes dimensions. A comparison of results obtained with the same process conditions using only PC and PC/PG mixture is reported in Figure 7.3.4. From this figure it appears more evident that when PG is used in the formulation of the lipid bilayer vesicles with larger dimensions were obtained systematically, instead the effect of pressure is confirmed as the same found using only PC.

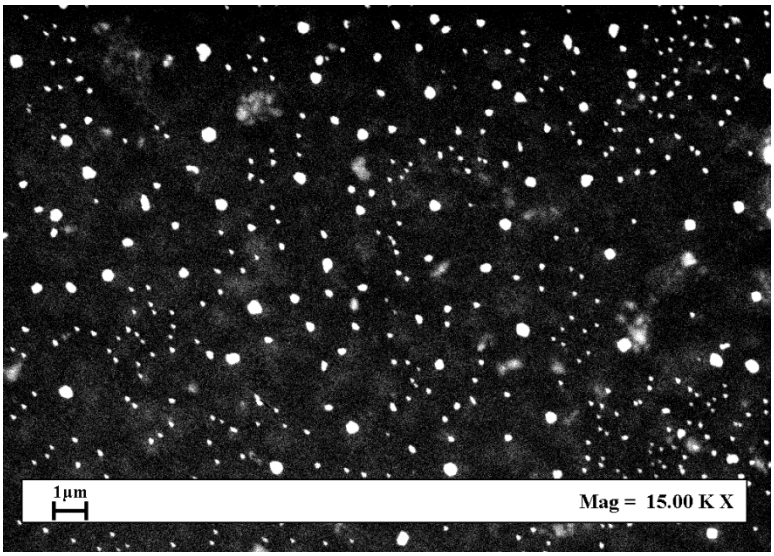

Figure 7.3.3 - SEM image of PC liposomes produced using SuperLip at 100 bar, 40°C, GLR 2.42.

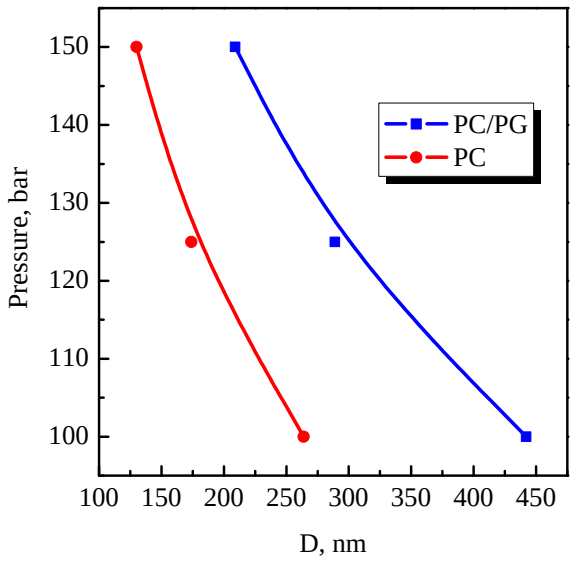

Figure 7.3.4 - Effect of pressure and at 40°C for PC and PC/PG liposomes diameter.

Protein encapsulation

To demonstrate the potential improvement of encapsulation efficiency of hydrosoluble drugs using *SuperLip* process, experiments were performed loading BSA or insulin in the water phase to be atomized and the encapsulation efficiency (EE) of the formed PC liposomes was measured. The theoretical loading was 1.7 % w/w of PC weight, corresponding to the composition of the water solution injected in the precipitator. Experiments were performed (in triplicates) at the operative conditions of: nozzle diameter 80 µm, 125 bar, tube length 8 cm, 40 °C. These parameters were chosen based in the conditions reported in a previous study (Espirito Santo et al., 2014).

Initial tests were performed encapsulating BSA into liposomes. Liposomes with an average diameter of 193 ± 77 nm were obtained. This result is in good agreement with the one reported in Table 7.3.1 for the analogous

experiment performed using pure water: indeed, the mean liposomes diameter only slightly increases in the case of water loaded with BSA, as a consequence of an increase of cohesive forces during atomization, due to the presence of the solute.

The same behavior happened when insulin was encapsulated into liposomes. Liposomes encapsulated insulin presented an average diameter of 296 ± 74 nm. This result is also in agreement with the experiment performed with pure water and even with the one with BSA, since insulin molecule is bigger and has a higher volume than BSA molecule.

The encapsulation efficiency obtained during these experiments performed with BSA and insulin ranged between 85 - 90% and 70 – 75% respectively, confirming the hypothesis of a very high efficiency of the entrapment of hydrophilic compounds, thanks to the direct formation of liposomes around the water solution containing the chosen protein models.

Chitosan coating

In order to demonstrate the possibility of coating liposomes with chitosan by *SuperLip* process, experiments were performed loading chitosan solution of two different concentrations (0.04% and 0.08%) in the water phase pipeline after the addition of BSA solution in the apparatus. So, the coating is performed just by the attraction of opposite electrostatic charges, since chitosan is positively charged and PG has negative one. The conditions of these experiments are the same as the one used in the encapsulation experiments.

Zeta potential of liposomes coated with liposome was evaluated and the results are demonstrated in the table 7.3.2.

Table 7.3.2 – Chitosan-coated liposomes encapsulating BSA. Process conditions: 40°C, CO_2 flow rate 6.7 g/min, water flow rate 10 mL/min, nozzle diameter 80 µm.

Chitosan concentration (%)	Zeta potential (mV)	Mean size (nm ± SD)
0	-36.90	193 ± 77
0.04	-7.44	325 ± 51
0.08	3.14	553 ± 42

It can be noticed that the coating using *SuperLip* process was effective, since the Zeta potential changed drastically with the increase of chitosan concentration. However, it was not possible to study the distribution of chitosan upon the phospholipid bilayer.

CONCLUSION

The *SuperLip* process proposed in this work, has the advantage, with respect to the other techniques proposed in the literature, of a continuous layout and the water phase is directly atomized in the high pressure vessel. This process allows a spontaneous organization liposomes in the high pressure vessel, showing an unimodal submicronic PSD. The fact that the liposomes are formed on the fly allows higher encapsulation efficiency, because the active compound contained in the water solution is efficiently entrapped in the formed

vesicles. Furthermore, it was demonstrated that this process allows also the recovery of the liposomes formed on the fly with polymers with opposite electrostatic charge.

Further studies are needed to investigate more complex loading of liposomes with different kind of active compounds and the distribution of the biopolymer upon the liposomes.

REFERENCES

Badens, E., Magnan, C., Charbit, G., 2001. Microparticles of soy lecithin formed by supercritical processes. Biotechnology and Bioengineering. 72, 194-204.

Cano-Sarabia, M., Ventosa, N., Sala, S., Patiño, C., Arranz, R., Veciana, J., 2008. Preparation of uniform rich cholesterol unilamellar nanovesicles using CO_2-expanded solvents. Langmuir. 24, 2433-2437.

Caputo, G., Adami, R., Reverchon, E., 2010. Analysis of Dissolved-Gas Atomization: Supercritical CO2 Dissolved in Water. Industrial & Engineering Chemistry Research. 49, 9454-9461.

Castor, T.P., Chu, L., 7 lug 1998, US5776486 A. Methods and apparatus for making liposomes containing hydrophobic drugs, WO9615774

Degim, I.T., Gümüsel, B., Degim, Z., Özcelikay, T., Tay, A., Güner, S., 2006. Oral administration of liposomal insulin. Journal of Nanoscience and Nanotechnology. 6, 2945-2949.

Drulis-Kawa, Z., Dorotkiewicz-Jach, A., 2010. Liposomes as delivery systems for antibiotics. International Journal of Pharmaceutics. 387, 187-198

Durling, N.E., Catchpole, O.J., Tallon, S.J., Grey, J.B., 2007. Measurement and modelling of the ternary phase equilibria for high pressure carbon dioxide-ethanol-water mixtures. Fluid Phase Equilibria. 252, 103-113.

Espirito Santo, I., Campardelli, R., Cabral Albuquerque, E., Vieira de Melo, S., Della Porta, G., Reverchon, E., 2014. Liposomes preparation using a supercritical fluid assisted continuous process. Chemical Engineering Journal. 249, 153-159.

Falco, N., Reverchon, E., Della Porta, G., 2012. Continuous supercritical emulsions extraction: packed tower characterization and application to poly(lactic-co-glycolic acid) + insulin microspheres production. Industrial & Engeneering Chemistry Research. 51, 8616-8623.

Frederiksen, L., Anton, K., Hoogevest, P.v., Keller, H., Leuenberger, H., 1997. Preparation of liposomes encapsulatins water-soluble compounds using supercritical carbon dioxide. Journal of Pharmaceutical Sciences. 86, 921-928.

Kadimi, U.S., Balasubramanian, D.R., Ganni, U.R., Balaraman, M., Govindaraiulu, V., 2007. In vitro studies on liposomal amphotericin B obtained by supercritical carbon dioxide-mediated process. Nanomedicine: Nanotechnology, Biology and Medicine. 3, 273-280.

Khafagy, E.-S., Morishita, M., Onuki, Y., Takayama, K., 2007. Current challenges in non-invasive insulin delivery systems: a comparative review. Advanced Drug Delivery Reviews. 59, 1521-1546.

Kisel, M.A., Kulik, L.N., Tsybovsky, I.S., Vlasov, A.P., Vorob'yov, M.S., Kholodova, E.A., Zabarovskaya, Z.V., 2001. Liposomes with phosphatidylethanol as a carrier for oral delivery of insulin: studies in the rat. International Journal of Pharmaceutics. 216, 105-114.

Kunastitchai, S., Pichert, L., Sarisuta, N., Müller, B.W., 2006. Application of aerosol solvent extraction system (ASES) process for preparation of liposomes in a dry and reconstitutable form. International Journal of Pharmaceutics. 316, 93-101.

Lesoin, L., Boutin, O., Crampon, C., Badens, E., 2011. CO_2/water/surfactant ternary systems and liposome formation using supercritical CO_2: a review. Colloids and Surfaces A: Physicochemical and Engineering Aspects. 377, 1-14.

Lesoin, L., Crampon, C., Boutin, O., Badens, E., 2011. Preparation of liposomes using the supercritical anti-solvent (SAS) process and comparison with a conventional method. Journal of Supercritical Fluids. 57, 162-174.

Li, Y., Yang, D.-J., Chen, S.-L., Chen, S.-B., Chan, A.S.-C., 2008. Process parameters and morphology in puerarin, phospholipids and their complex microparticles generation by supercritical antisolvent precipitation. International Journal of Pharmaceutics. 359, 35-45.

Massing, U., Cicko, S., Ziroli, V., 2008. Dual asymmetric centrifugation (DAC) - a new technique for liposome preparation. Journal of Controlled Release. 125, 16-24.

Meure, L.A., Foster, N.R., Dehghani, F., 2008. Conventional and dense gas techniques for the production of liposomes: a review. AAPS PharmSciTech. 9, 798-809.

Meure, L.A., Knott, R., Foster, N.R., Dehgani, F., 2009. The depressurizationof an expanded solution into aqueous media for the bulk production of liposomes. Langmuir. 25, 326-337.

Otake, K., Imura, T., Sakai, H., Abe, M., 2001. Development of a new preparation method of liposomes using supercritical carbon dioxide. Langmuir. 17, 3898-3901.

Platzer, B., Maurer, G., 1989. A generalized equation of state for pure polar and nonpolar fluids. Fluid Phase Equilibria. 51, 223-236.

Pöhler, H., Kiran, E., 1997. Volumetric Properties of Carbon Dioxide + Ethanol at High Pressures. Journal of Chemical & Engineering Data. 42, 384-388.

Salamat-Miller, N., Johnston, T.P., 2005. Current strategies to enhance the paracellular transport of therapeutic polypeptides across the intestinal epithelium. International Journal of Pharmaceutics. 294, 201-216.

Shaji, J., Patole, V., 2008. Protein and peptide drug delivery: oral approaches. Indian Journal of Pharmaceutical Sciences. 70, 269-277.

Zhang, N., Ping, Q.N., Huang, G.H., Xu, W.F., 2005. Investigation of lectin-modified insulin liposomes as carriers for oral administration. International Journal of Pharmaceutics. 294, 247-259.

Xia, F., Jin, H., Zhao, Y., Guo, X., 2011. Supercritical antisolvent-based technology for preparation of vitamin D_3 proliposome and its characteristics. Chinese Journal of Chemical Engineering. 19, 1039-1046.

8. General conclusions

The first aim of this work was the production of nanometric liposomes through a one step and fast method without residual solvent or low solvent residue. In this context, the supercritical technology offers an alternative to circumvent the limitations of the conventional methods.

According to FDA, commercialized lipid-based drug carrier products should present low solvent residue values (less than 5000 ppm, if the organic solvent is ethanol).However, traditional methods of liposomes production, as ethanol injection, leave a high amount of solvent residue as shown in Chapter 7. Using supercritical technology, we successfully reduced the organic solvent amount from liposome suspension through a high pressure continuous process. The innovative process arrangement is obtained by the use of a high pressure packed column operating in countercurrent mode, in which mass transfer between the phases is improved by the presence of the internal packing elements.

The obtained results have shown that this process is efficient in eliminating the residual ethanol from the bulk of liposome suspension and even from the liposome membranes. It was also shown that the vesicles were not damaged by the supercritical process and that they presented a shrinking factor between 15 and 40%.

Current research indicates that supercritical fluid technology platforms can be successfully and beneficially applied to the manufacture of nanometric carriers. SuperLip apparatus was able to produce nanometric liposomes that are suitable for pharmaceutical applications that require controlled drug release. The literature shows that liposomes can be produced by several techniques

using supercritical fluid. Some of them are mostly batch processes, which consists in processes that use supercritical CO_2 and ethanol. However, there are two continuous dense gas processes for liposome production: SuperLip process and Lesoin et al (2011b). Liposome produced by SuperLip apparatus presented high yield (about 90%) with the advantage of using a continuous method of production. Literature shows that supercritical batch methods are capable of producing micrometric liposomes.

Liposomes produced in SuperLip apparatus provided high encapsulation efficiency of hydrophilic biomolecules, since the active compounds presented in the water solution is entrapped by the liposomes formed on the fly inside of the apparatus. In general, hydrophilic molecules presented low encapsulation efficiency when liposomes are produced by conventional methods. Moreover, studies with supercritical fluids demonstrate only their production, but there is no demonstration of encapsulation of therapeutic proteins and/or thermosensitive molecules.

Results obtained in this study demonstrated that the process is effective in producing liposomes with controlled size distribution and high encapsulation efficiency of the chosen protein models, in this case BSA (85 – 90%) and insulin (70 – 75%). Additionally, this process also allows the coating of nanometric liposomes with mucoadhesive polymers. It was also noticed that the chitosan-coating of the formed liposomes was effective.

9. Perspectives

The continuous process developed in this study (SuperLip) produced successfully nanometric liposomes. However, additional improvements related to this process can be performed.

Results showed that SuperLip process is able to promote high encapsulation efficiency of the chosen proteins models - BSA (85 – 90%) and insulin (70 – 75%). However it is important to investigate id the protein activity is maintained after the processing. Another important point to be investigated is the encapsulation of different types of biomolecules, including lipophilic compounds.

Furthermore, studies with liposome carrying drugs, as peptides and proteins, are also necessary in order to understand if there will be any modification on the entrapment efficiency regarding liposomes processed by SEE-C.

Concerning the liposome coating, results demonstrated that liposomes were successfully coated with chitosan, a mucoadhesive biopolymer. However, it is important to understand the distribution of chitosan layer upon the liposomes.

Moreover, studies are necessary to be done in order to understand the characteristics of the final product both for *SuperLip*, as for SEE-C.

10. Reference list

Adamo, M., Roberts-Jr., C.T., LeRoith, D., 1998. Insulin and insulin-like growth factor in health and disease. Principles od Medical Biology. 10B, 339-363.

al-Achi, A., Greenwood, R., 1993. Buccal administration of human insulin in streptozocin-diabetic rats. Research Communications in Chemical Pathology and Pharmacology. 82, 297-306.

Alessi, P., Cortesi, A., Kikic, I., Vecchione, F., 2003. Plasticization of polymers with supercritical carbon dioxide: experimental determination of glass-transition temperatures. Journal of Applied Polymer Science. 88, 2189-2193.

Almeida, A.J., Souto, E., 2007. Solid lipid nanoparticles as a drug delivery system for peptides and proteins. Advanced Drug Delivery Reviews. 59, 478-490.

Amidi, M., Mastrobattista, E., Jiskoot, W., Hennink, W.E., 2010. Chitosan-based delivery systems for protein therapeutics and antigens. Advanced Drug Delivery Reviews. 62, 59-82.

Argemi, A., Domingo, C., de Sousa, A.R., Duarte, C.M., Garcia-Gonzalez, C.A., Saurina, J., 2011. Characterization of new topical ketoprofen formulations prepared by drug entrapment in solid lipid matrices. Journal of Pharmaceutical Sciences. 100, 4783-9.

Badens, E., Magnan, C., Charbit, G., 2001. Microparticles of soy lecithin formed by supercritical processes. Biotechnology and Bioengineering. 72, 194-204.

Bahrami, M., Ranjbarian, S., 2007. Production of micro- and nano-composite particles by supercritical carbon dioxide. Journal of Supercritical Fluids. 40, 263-283.

Bangham, A.D., 1963. Physical structure and behavior of lipids and lipid enzymes. Advances in Lipid Research. 1, 65-104.

Barry, J.J.A., Silva, M.M.C.G., Popov, V.K., Shakesheff, K.M., Howdle, S.M., 2006. Supercritical carbon dioxide: putting the fizz into biomaterials. Philosophical Transactions. Series A, Mathematical, Physical, and Engineering Sciences 364, 249-261.

Batzri, S., Korn, E.D., 1973. Single bilayer liposomes prepared without sonication. Biochimica et Biophysica Acta. 298, 1015-1019.

Baudys, M., Uchio, T., Hovgaard, L., Zhu, E.F., Avramoglou, T., Josefowicz, M., Rihová, B., Park, J.Y., Lee, H.K., Kim, S.W., 1995. Glycosylated insulins. Journal of Controlled Release. 36, 151-157.

Beckman, E.J., 2004. Supercritical and near-critical CO_2 in green chemical synthesis and processing. Journal of Supercritical Fluids. 28, 121-191.

Benoit, J.P., Rolland, H., Thies, C., Velde, V.V., 2000. Method of coating particles and coated spherical particles, U.S. Patent, 6087003.

Bertucco, A., Caliceti, P., Elvassore, N., 2007. Process for the production of nano-particles, WIPO Patent, WO 2007/028421 A1.

Brion, M., Jaspart, S., Perrone, L., Piel, G., Evrard, B., 2009. The supercritical micronization of solid dispersion by particles from gas saturated solutions using experimental design. Journal of Supercritical Fluids. 51, 50-56.

Brunner, G., 1994a. Gas extraction, Springer Verlag, New York.

Calderone, M., Rodier, E., 2006. Method for coating powders, World Intellectual Property Organization Patent, 6056791.

Calderone, M., Rodier, E., Lochard, H., Marciacq, F., Fages, J., 2008. A new supercritical co-injection process to coat microparticles. Chemical Engineering and Processing: Process Intensification. 47, 2228-2237.

Campardelli, R., Adami, R., Della Porta, G., Reverchon, E., 2012a. Nanoparticle precipitation by supercritical assisted injection in a liquid antisolvent. Chemical Engineering Journal. 192, 246-251.

Campardelli, R., Della Porta, G., Reverchon, E., 2012b. Solvent elimination from polymer nanoparticle suspensions by continuous supercritical extraction. The Journal of Supercritical Fluids. 70, 100-105.

Cano-Sarabia, M., Ventosa, N., Sala, S., Patiño, C., Arranz, R., Veciana, J., 2008. Preparation of uniform rich cholesterol unilamellar nanovesicles using CO_2-expanded solvents. Langmuir. 24, 2433-2437.

Caputo, G., Adami, R., Reverchon, E., 2010. Analysis of Dissolved-Gas Atomization: Supercritical CO2 Dissolved in Water. Industrial & Engineering Chemistry Research. 49, 9454-9461.

Carino, G.P., Mathiowitz, E., 1999. Oral insulin delivery. Advanced Drug Delivery Reviews. 35, 249-257.

Castor, T.P., 2005. Phospholipid nanosomes. Curr Drug Deliv. 2, 329-40.

Castor, T.P., Chu, L., 7 lug 1998, US5776486 A. Methods and apparatus for making liposomes containing hydrophobic drugs, WO9615774.

Chattopadhyay, P., Huff, R., Shekunov, B.Y., 2006a. Drug encapsulation using supercritical fluid extraction of emulsions. Journal of Pharmaceutical Sciences. 95, 667-679.

Chattopadhyay, P., Shekunov, B., Seitzinger, J., 2006b. Method and apparatus for continuous particle production using supercritical fluid, U. S. Patent, 7083748 B2.

Chattopadhyay, P., Shekunov, B.Y., Yim, D., Cipolla, D., Boyd, B., Farr, S., 2007a. Production of solid lipid nanoparticle suspensions using supercritical fluid extraction of emulsions (SFEE) for pulmonary delivery using the AERx system. Advanced Drug Delivery Reviews. 59, 444-53.

Chattopadhyay, P., Shekunov, B.Y., Yim, D., Cipolla, D., Boyd, B., Farr, S., 2007b. Production of solid lipid nanoparticles suspensions using supercritical fluid extraction of emulsions (SFEE) for pulmonary delivery using the AERx system. Advanced Drug Delivery Reviews. 59, 444-453.

Chien, Y.W., 1996. Human Insulin: Basic science to therapeutic uses. Grud delivery and Industrial Pharmacy. 35, 249-257.

Chono, S., Fukuchi, R., Seki, T., Morimoto, K., 2009. Aerosolized liposomes with dipalmitoyl phosphatidylcholine enhance pulmonary insulin delivery. Journal of Controlled Release. 137, 104-109.

Chung, H., Kim, T., Kwon, I., Jeong, S., 2001. Stability of the oil-in-water type triacylglycerol emulsions. Biotechnology and Bioprocess Engineering. 6, 284-288.

Cocero, M.J., Martín, Á., Mattea, F., Varona, S., 2009. Encapsulation and co-precipitation processes with supercritical fluids: Fundamentals and applications. The Journal of Supercritical Fluids. 47 546–555.

Daar, J., Poliakoff, M., 1999. New directions in inorganic metal-organic coordination chemistry in supercritical fluids. Chemical Reviews. 99, 495 - 541.

Davies, O., Lewis, A., Whitaker, M., Tai, H., Shakesheff, K., Howdle, S., 2008. Applications of supercitical CO_2 in the fabrication of polymer systems for drug delivery and tissue engineering. Advanced Drug Delivery Reviews. 60, 373-387.

De Marco, I., Knauer, O., Cice, F., Braeuer, A., Reverchon, E., 2012. Interactions of phase equilibria, jet fluid dynamics and mass transfer during supercritical antisolvent micronization: The influence of solvents. Chemical Engineering Journal. 203, 71-80.

Degim, I.T., Gümüsel, B., Degim, Z., Özcelikay, T., Tay, A., Güner, S., 2006. Oral administration of liposomal insulin. Journal of Nanoscience and Nanotechnology. 6, 2945-2949.

Della Porta, G.N.F., Reverchon, E., 2011. Continuous supercritical emulsion extraction: a new technology for biopolymer microparticles production. Biotechnology and Bioengineering. 108, 676-686.

Detoni, C.B., Oliveira, D.M., Espirito Santo, I., São Pedro, A., El-Bacha, R., Velozo, E.S., Ferreira, D., Sarmento, B., Cabral-Albuquerque, E.C.M., 2012. Evaluation of thermal-oxidative stability and antiglioma activity of *Zanthoxylum tingoassuiba* essential oil entrapped into multi- and unilamellar liposomes. Journal of Liposome Research. 22, 1-7.

Drulis-Kawa, Z., Dorotkiewicz-Jach, A., 2010. Liposomes as delivery systems for antibiotics. International Journal of Pharmaceutics. 387, 187-198.

Durling, N.E., Catchpole, O.J., Tallon, S.J., Grey, J.B., 2007. Measurement and modelling of the ternary phase equilibria for high pressure carbon dioxide-ethanol-water mixtures. Fluid Phase Equilibria. 252, 103-113.

Falco, N., Reverchon, E., Della Porta, G., 2012. Continuous Supercritical Emulsions Extraction: Packed Tower Characterization and Application to Poly(lactic-co-glycolic Acid) plus Insulin Microspheres Production. Industrial & Engineering Chemistry Research. 51, 8616-8623.

Foster, N., Mammucari, R., Dehghani, F., Barrett, A., Bezanehtak, K., Coen, E., Combes, G., Meure, L., Ng, A., Regtop, H., Tandya, A., 2003. Processing pharmaceutical compounds using dense gas technology. Industrial & Engineering Chemistry Research. 42, 6476-6493.

Frederiksen, L., Anton, K., Hoogevest, P.v., Keller, H., Leuenberger, H., 1997. Preparation of liposomes encapsulatins water-soluble compounds using supercritical carbon dioxide. Journal of Pharmaceutical Sciences. 86, 921-928.

García-Fuentes, M., Torres, D., Alonso, M.J., 2002. Design of lipid nanoparticles for the oral delivery of hydrophilic macromolecules. Colloids and Surfaces B: Biointerfaces. 27, 159-168.

García-González, C.A., Argemí, A., Sampaio de Sousa, A.R., Duarte, C.M.M., Saurina, J., Domingo, J., 2010a. Encapsulation efficiency of solid lipid hybrid particles prepared using the PGSS® technique and loaded with different polarity active agents. Journal of Supercritical Fluids. 54, 342-347.

García-González, C.A., Argemí, A., Sousa, A.R.S.d., Duarte, C.M.M., Saurina, J., Domingo, C., 2010b. Encapsulation efficiency of solid lipid hybrid particles prepared using the PGSS® technique and loaded with different polarity active agents. The Journal of Supercritical Fluids. 54 342–347.

Gortzi, O., Lalas, S., Chinou, I., Tsaknis, J., 2007. Evaluation of the antimicrobial and antioxidant activities of *Origanum dictamnus* extracts before and after encapsulation in liposomes. Molecules. 12, 932-945.

Grodowska, K., Parczewski, A., 2010. Organic solvents in the pharmaceutical industry. Acta Poloniae Pharmaceutica - Drug Research. 67, 3-12.

Haga, M., Saito, K., Shimaya, T., Maezawa, Y., Kato, Y., Kim, S.W., 1990. Hypoglycemic effect of intestinally administred monosaccharide-modified insulin derivatives in rats. Chemical & Pharmaceutical Bulletin. 38, 1983-1986.

Hari, P.R., Chandy, T., Sharma, C.P., 1996. Chitosan/calcium-alginate beads for oral delivery of insulin. Journal of Applied Polymer Science. 59, 1795-1801.

Hashimoto, T., Nomoto, M., Komatsu, K., Haga, M., Hayashi, M., 2000. Improvement of intestinal absorption of peptides: adsorption of B1-Phe monoglucosylated insulin to rat intestinal brush-border membrane vesicles. European Journal of Pharmaceutics and Biopharmaceutics. 50, 197-204.

Hejazi, R., Amiji, M., 2003. Chitosan-based gastrointestinal delivery systems. Journal of Controlled Release. 89, 151-165.

Huang, Y.-Y., Wang, C.-H., 2006. Pulmonary delivery of insulin by liposomal carriers. Journal of Controlled Release. 113, 9-14.

Ibrahim, M.A., Ismail, A., Fetouh, M.I., Göpferich, A., 2005. Stability of insulin during the erosion of poly(lactic acid) and poly(lactic-co-glycolic acid) microspheres. Journal of Controlled Release. 106, 241-252.

Imura, T., Gotoh, T., Otake, K., Yoda, S., Takebayashi, Y., Yokoyama, S., Takebayashi, H., Sakai, H., Yuasa, M., Abe, M., 2003. Control of physicochemical properties of liposomes using a supercritical reverse phase evaporation method. Langmuir. 19, 2021-2025.

Imura, T., Otake, K., Hashimoto, S., Gotoh, T., Yuasa, M., Yokoyama, S., Sakai, H., Rathman, J.F., Abe, M., 2002. Preparation and physicochemical properties of various soybean lecithin liposomes using supercritical reverse phase evaporation method. Colloids and Surfaces B: Biointerfaces. 27, 133-140.

Iwanaga, K., Ono, S., Narioka, K., Kakemi, M., Morimoto, K., Yamashita, S., Namba, Y., Oku, N., 1999. Application of surface-coated liposomes for oral delivery of peptide: effects of coating the liposome's surface on the GI transit of insulin. Journal of Pharmaceutical Sciences. 88, 248-252.

Jain, A.K., Chalasani, K.B., Khar, R.K., Ahmed, F.J., Diwan, P.V., 2007. Muco-adhesive multivesicular liposomes as an effective carrier for transmucosal insulin delivery. Journal of Drug Targeting. 15, 417-427.

Jederstrom, G., Andersson, A., Gråsjö, J., Sjöholm, I., 2004. Formulating insulin for oral administration: preparation of hyaluronan-insulin complex. Pharmaceutical Research. 21, 2040-2047.

Jones, M.N., 1995. The surface properties of phospholid liposome systems and their characterisation. Advances in Colloid and Interface Science. 54, 93-128.

Jorgensen, L., Moeller, E.H., Weert, M.v.d., Nielsen, H.M., Frokjaer, S., 2006. Preparing and evaluating delivery systems for proteins. European Journal of Pharmaceutical Sciences. 29, 174-182.

Joshi, M.D., Müller, R.H., 2009. Lipid nanoparticles for parenteral delivery of actives. European Journal of Pharmaceutics and Biopharmaceutics. 71, 161-172.

Justo, O.R., Moraes, A.M., 2011. Analysis of process parameters on the characteristics of liposomes prepared by ethanol injection with a view to process scale-up: effect of temperature and batch volume. Chemical Engineering Research and Design. 89, 785-792.

Kadimi, U.S., Balasubramanian, D.R., Ganni, U.R., Balaraman, M., Govindaraiulu, V., 2007. In vitro studies on liposomal amphotericin B obtained by supercritical carbon dioxide-mediated process. Nanomedicine: Nanotechnology, Biology and Medicine. 3, 273-280.

Karathanasis, E., Bhavane, R., Annapragada, A.V., 2006. Triggered release of inhaled insulin from tje agglomerated vesicles: pharmacodynamic studies in rats. Journal of Controlled Release. 113, 117-127.

Khafagy, E.-S., Morishita, M., Onuki, Y., Takayama, K., 2007. Current challenges in non-invasive insulin delivery systems: a comparative review. Advanced Drug Delivery Reviews. 59, 1521-1546.

Kim, C.-K., Jeong, E.J., 1995. Development of dried liposome as effective immuno-adjuvant for hepatitis B surface antigen. International Journal of Pharmaceutics. 115, 193-199.

Kisel, M.A., Kulik, L.N., Tsybovsky, I.S., Vlasov, A.P., Vorob'yov, M.S., Kholodova, E.A., Zabarovskaya, Z.V., 2001. Liposomes with phosphatidylethanol as a carrier for oral delivery of insulin: studies in the rat. International Journal of Pharmaceutics. 216, 105-114.

Knez, Ž., Weidner, E., 2001. 9.8 Preciptation of solids with dense gases, in: A. Bertucco and G. Vetter (Eds.), Industrial Chemistry Library. Elsevier, pp. 587-611.

Kompella, U.B., Koushik, K., 2001. Preparation of drug delivery systems using supercritical fluid technology. Critical Reviews in Therapeutic Drug Carrier Systems. 18, 173-199.

Könner, A.C., Klöckener, T., Brüning, J.C., 2009. Control of energy homeostasis by insulin and leptin: targeting the arcuate nucleus and beyond. Physiology & Behavior. 97, 632-638.

Kreuter, J., 1996. Nanoparticles and microparticles for drug and vaccine delivery. Journal of Anatomy. 189, 503-505.

Kunastitchai, S., Pichert, L., Sarisuta, N., Müller, B.W., 2006. Application of aerosol solvent extraction system (ASES) process for preparation of liposomes in a dry and reconstitutable form. International Journal of Pharmaceutics. 316, 93-101.

Lane, E.M., O'Driscoll, C.M., Corrigan, O.I., 2005. Quantitative estimation of the effects of bile salts surfactants systems on insulin stability and permeability in the rat intestine using a mass balance model. Journal of Pharmacy and Pharmacology. 57, 169-175.

Lesoin, L., Boutin, O., Crampon, C., Badens, E., 2011a. CO_2/water/surfactant ternary systems and liposome formation using supercritical CO_2: a review. Colloids and Surfaces A: Physicochemical and Engineering Aspects. 377, 1-14.

Lesoin, L., Crampon, C., Boutin, O., Badens, E., 2011b. Development of a continuous dense gas process for the production of liposomes. Journal of Supercritical Fluids. 60, 51-62.

Lesoin, L., Crampon, C., Boutin, O., Badens, E., 2011c. Preparation of liposomes using the supercritical anti-solvent (SAS) process and comparison with a conventional method. Journal of Supercritical Fluids. 57, 162-174.

Lesoin, L., Crampon, C., Boutin, O., Badens, E., 2011d. Preparation of liposomes using the supercritical anti-solvent (SAS) process and comparison with a conventional method. Journal of Supercritical Fluids. 57, 162-174.

Li, J., Rodrigues, M., Paiva, A., Matos, H.A., Azevedo, E.G.d., 2005. Modeling of the PGSS process by cristallization and atomization. AIChE Journal. 51, 2343-2357.

Li, Y., Yang, D.-J., Chen, S.-L., Chen, S.-B., Chan, A.S.-C., 2008a. Comparative physicochemical characterization of phospholipids complex of puerarin formulated by conventional and supercritical methods. Pharmaceutical Research. 25, 563-577.

Li, Y., Yang, D.-J., Chen, S.-L., Chen, S.-B., Chan, A.S.-C., 2008b. Process parameters and morphology in puerarin, phospholipids and their complex microparticles generation by supercritical antisolvent precipitation. International Journal of Pharmaceutics. 359, 35-45.

Liu, J., Gong, T., Fu, H., Wang, C., Wang, X., Chen, Q., Zhang, Q., He, Q., Zhang, Z., 2008. Solid lipid nanoparticles for pulmonary delivery of insulin. International Journal of Pharmaceutics. 356, 333-344.

Lubary, M., de Loos, T.W., ter Horst, J.H., Hofland, G.W., 2011. Production of microparticles from milk fat products using the Supercritical Melt Micronization (ScMM) process. The Journal of Supercritical Fluids. 55, 1079-1088.

Lueβen, H.L., Rentel, C.-O., Kotzé, A.F., Lehr, C.-M., Boer, A.G.d., Verhoef, J.C., Junginger, H.E., 1997. Mucoadhesive polymers in peroral peptide drug delivery. IV. Polycarbophil and chitosan are potent enhancers of peptide transport across intestinal mucosae *in vitro*. Journal of Controlled Release. 45,

Madzuka, Z., Knez, Z., 2008. Influence of temperature and pressure during PGSS[TM] micronization and storage time on degree of crystallinity and crystal forms of monostearate and triearate. Journal of Supercritical Fluids. 45, 102-111.

Magnan, C., Badens, E., Commenges, N., Charbit, G., 2000. Soy lecithin micronization by preciptation with a complesses fluid antisolvent - influence of process parameters. journal of supercritical ruins. 19, 69-77.

Manosroi, A., Chutoprapat, R., Abe, M., Manosroi, J., 2008. Characteristics of niosomes prepared by supercritical carbon dioxide ($scCO_2$) fluid. International Journal of Pharmaceutics. 352, 248-255.

Manosroi, A., Ruksiriwanich, W., Abe, M., Sakai, H., Manosroi, W., Manosroi, J., 2010. Biological activities of the rice bran extract and physical characteristics of its entrapment in niosomes by supercritical carbon dioxide fluid. Journal of Supercritical Fluids. 54, 137-144.

Marschütz, M.K., Bernkop-Schnürch, A., 2000. Oral peptide drug delivery: polymer-inhibitor conjugates protecting insulin from enzymatic degradation *in vitro*. Biomaterials. 21, 1499-1507.

Martín, A., Cocero, M.J., 2008. Micronization processes with supercritical fluids: fundamentals ans mechanisms. Advanced Drug Delivery Reviews. 60,

Martins, S., Sarmento, B., Ferreira, D.C., Souto, E.B., 2007. Lipid-based colloidal carriers for peptide and protein delivery - liposomes versus lipid nanoparticles. International Journal of Nanomedicine. 2, 595-607.

Massing, U., Cicko, S., Ziroli, V., 2008. Dual asymmetric centrifugation (DAC) - a new technique for liposome preparation. Journal of Controlled Release. 125, 16-24.

Mehnert, W., Mäder, K., 2001. Solid lipid nanoparticles: production, characterization and applications. Advanced Drug Delivery Reviews. 47, 165-196.

Meure, L.A., Foster, N.R., Dehghani, F., 2008. Conventional and dense gas techniques for the production of liposomes: a review. AAPS PharmSciTech. 9, 798-809.

Meure, L.A., Knott, R., Foster, N.R., Dehgani, F., 2009. The depressurizationof an expanded solution into aqueous media for the bulk production of liposomes. Langmuir. 25, 326-337.

Meyts, P.d., 1994. The structural basis of insulin and insulin-like growth factor-I receptor binding and negative co-operativity, and its relevance to mitogenic versus metabolic signalling. Diabetologia. 37 Suppl 2, S135-S148.

Mitra, R., Pezron, I., Li, Y., Mitra, A.K., 2001. Enhanced pulmonary delivery of insulin by lung lavage fluid and phospholipids. International Journal of Pharmaceutics. 217, 25-31.

Mohanraj, V.J., Barnes, T.J., Prestidge, C.A., 2010. Silica nanoparticle coated liposomes: a new type of hybrid nanocapsule for proteins. International Journal of Pharmaceutics. 392, 285-293.

Morishita, M., Kajita, M., Suzuki, A., Takayama, K., Chiba, Y., Tokiwa, S., Nagai, T., 2000. The dose-related hypoglycemic effects of insulin emulsions incorporating highly purified EPA and DHA. International Journal of Pharmaceutics. 201, 175-185.

Morishita, M., Matsuzawa, A., Takayama, K., Isowa, K., Nagai, T., 1998. Improvement insulin enteral absorption using water-in-oil-in-water emulsion. International Journal of Pharmaceutics. 172, 189-198.

Mukherjee, S., Ray, S., Thakur, R.S., 2009. Solid lipid nanoparticles: a modern formulation approach in drug delivery system. Indian Journal of Pharmaceutical Sciences. 71, 349-58.

Müller, R.H., Mäder, K., Gohla, S., 2000. Solid lipid nanoparticles (SLN) for controlled drug delivery - a review of the state of the art. European Journal of Pharmaceutical Sciences. 50, 161-177.

Naik, S., Patel, D., Surti, N., Misra, A., 2010. Preparation of PEGylated liposomes of docetaxel using supercritical fluid technology. Journal of Supercritical Fluids. 54, 110-119.

Nalawade, S.P., Picchioni, F., Janssen, L.P.B.M., 2006. Supercritical carbon dioxide as a green solvent for processing polymer melts: processing aspects and applications. Progress in Polymer Science. 31, 19-43.

Nalawade, S.P., Picchioni, F., Janssen, L.P.B.M., 2007. Batch production of micron size particles from poly(ethylene glycol) using supercritical CO_2 as a processing solvent. Chemical Engineering Science. 62, 1712-1720.

Nishikawa, K., Ayusawa, A., Morita, T., 2004. Density fluctuation of supercritical fluids obtained from small-angle X-ray scattering experiment and thermodynamic calculation. Journal of Supercritical Fluids. 30, 249-257.

Nishikawa, K., Morita, T., 1998. Fluid behavior at supercritical states studied by small-angle X-ray scattering. Journal of Supercritical Fluids. 13, 143-148.

Nishikawa, K., Morita, T., 2000. Inhomogeneity of molecular distribution in supercritical fluids. Chemical Physics Letters. 316, 238-242.

Obeidat, W.M., 2009. Recent patents review in microencapsulation of pharmaceuticals using the emulsion solvent removal methods. Recent Patents on Drug Delivery & Formulation. 3, 178-192.

Otake, K., Imura, T., Sakai, H., Abe, M., 2001. Development of a new preparation method of liposomes using supercritical carbon dioxide. Langmuir. 17, 3898-3901.

Otake, K., Shimomura, T., Goto, T., Imura, T., Furuya, T., Yoda, S., Takebayashi, Y., Sakai, H., Abe, M., 2006a. One-step preparation of chitosan-coated cationic liposomes by an improved supercritical reverse-phase evaporation method. Langmuir. 22, 4054-4059.

Otake, K., Shimomura, T., Goto, T., Imura, T., Furuya, T., Yoda, S., Takebayashi, Y., Sakai, H., Abe, M., 2006b. Preparation of liposomes using an improved supercritical reverse phase evaporation method. Langmuir. 22, 2543-2550.

Pan, Y., Zheng, J.-M., Zhao, H.Y., Li, Y.-J., Xu, H., Wei, G., 2002. Relantioship between drug effects and particle size of insulin-loaded bioadhesive microsphere. Acta Pharmacologica Sinica. 23, 1051-1056.

Pasquali, I., Bettini, R., 2008. Are pharmaceuticals really going supercritical? International Journal of Pharmaceutics. 364, 176-187.

Patel, H., Ryman, B., 1976. Oral administration of insulin by encapsulation within liposomes. FEBS Letters. 62, 60-63.

Platzer, B., Maurer, G., 1989. A generalized equation of state for pure polar and nonpolar fluids. Fluid Phase Equilibria. 51, 223-236.

Pöhler, H., Kiran, E., 1997. Volumetric Properties of Carbon Dioxide + Ethanol at High Pressures. Journal of Chemical & Engineering Data. 42, 384-388.

Puri, A., Loomis, K., Smith, B., Lee, J.-H., Yavlovich, A., Heldman, E., Blumenthal, R., 2009. Lipid-based nanoparticles as pharmaceutical drug carriers: from concepts to clinic. Critical Reviews in Therapeutic Drug Carrier Systems. 26, 523-580.

Ramkissoon-Ganorkar, C., Liu, F., Baudys, M., Kim, S.W., 1999. Modulating insulin-release profile from pH/thermosensitive polymeric beads through polymer molecular weight. Journal of Controlled Release. 59, 287-298.

Reitz, R.D., Bracco, F.V., 1982. Mechanism of atomization of a liquid jet. Physics of Fluids. 25, 1730-1742.

Reverchon, E., Adami, R., 2006. Nanomaterials and supercritical fluids. Journal of Supercritical Fluids. 37, 1-22.

Reverchon, E., Adami, R., Cardea, S., Della Porta, G., 2009a. Supercritical fluids processing of polymers for pharmaceutical and medical applications. Journal of Supercritical Fluids. 47, 484-492.

Reverchon, E., Adami, R., Cardea, S., Porta, G.D., 2009b. Supercritical fluids processing of polymers for pharmaceutical and medical applications. Journal of Supercritical Fluids. 47, 484-492.

Reverchon, E., Cardea, S., Schiavo Rappo, E., 2008. Membranes formation of a hydrosoluble biopolymer (PVA) using a supercritical CO2-expanded liquid. Journal of Supercritical Fluids. 45, 356-364.

Reverchon, E., Della Porta, G., 2003. Micronization of antibiotics by supercritical assited atomization. Journal of Supercritical Fluids. 26, 243-252.

Ribeiro dos Santos, I., Richard, J., Pech, B., Benoit, J.P., 2002a. Microencapsulation of protein particles within lipids using a novel supercritical fluid process. International Journal of Pharmaceutics. 242, 69-78.

Ribeiro Dos Santos, I., Richard, J., Pech, B., Thies, C., Benoit, J.P., 2002b. Microencapsulation of protein particles within lipids using a novel supercritical fluid process. International Journal of Pharmaceutics. 242, 69-78.

Ribeiro dos Santos, I., Richard, J., Thies, C., Pech, B., Benoit, J.P., 2003a. A supercritical fluid-based coating technology. 3: preparation and chatacterization of bovine serum albumin particles coated with lipids. Journal of Microencapsulation. 20, 110-128.

Ribeiro dos Santos, I., Thies, C., Richard, J., Meurlay, D.L., Gajan, V., VandeVelde, V., Benoit, J.P., 2003b. A supercritical fluid-based coating technology. 2: solubility considerations. Journal of Microencapsulation. 20, 97-109.

Rieux, A.d., Fievez, V., Garinot, M., Schneider, Y.-J., Préat, V., 2006. Nanoparticles as potential oral delivery systems of proteins and vaccines: a mechanistic approach. Journal of Controlled Release. 116, 1-27.

Rodrigues, M., Peiriço, N., Matos, H., Azevedo, E.G.d., Lobato, M.R., Almeida, A.J., 2004a. Microcomposites theophylline/hydrogenated palm oil from a PGSS process for controlled drug delivery systems. Journal of Supercritical Fluids. 29, 175-184.

Rodrigues, M., Peiriço, N., Matos, H., Gomes de Azevedo, E., Lobato, M.R., Almeida, A.J., 2004b. Microcomposites theophylline/hydrogenated palm oil from a PGSS process for controlled drug delivery systems. The Journal of Supercritical Fluids. 29, 175-184.

Saffran, M., Kumar, G.S., Savarian, C., Burham, J.C., Williams, F., Neckers, D.C., 1986. A new approach to the oral administration of insulin and other peptide drugs. Science. 233, 1081-1084.

Saffran, M., Pansky, B., Budd, G., Williams, F., 1997. Insulin and the gastrointestinal tract. Journal of Controlled Release. 46, 89-98.

Salamat-Miller, N., Johnston, T.P., 2005. Current strategies to enhance the paracellular transport of therapeutic polypeptides across the intestinal epithelium. International Journal of Pharmaceutics. 294, 201-216.

Salmaso, S., Bersani, S., Elvassore, N., Bertucco, A., Caliceti, P., 2009a. Biopharmaceutical characterisation of insulin and recombinant human growth hormone loaded lipid submicron particles produced by supercritical gas micro-atomisation. International Journal of Pharmaceutics. 379, 51-58.

Salmaso, S., Elvassore, N., Bertucco, A., Caliceti, P., 2009b. Production of solid lipid submicron particles for protein delivery using a novel supercritical gas-assisted melting atomization process. Journal of Pharmaceutical Sciences. 98, 640-650.

Sampaio de Sousa, A.R., Silva, R., Tay, F.H., Simplício, A.L., Kazarian, S.G., Duarte, C.M.M., 2009. Solubility enhancement of trans-chalcone using lipid carriers and supercritical CO2 processing. The Journal of Supercritical Fluids. 48, 120-125.

Sampaio de Sousa, A.R., Simplício, A.L., de Sousa, H.C., Duarte, C.M.M., 2007a. Preparation of glycerol monostearate-based particles by PGSS®-Application to caffeine. Journal of Supercritical Fluids. 43, 120-125.

Sampaio de Sousa, A.R., Simplício, A.L., de Sousa, H.C., Duarte, C.M.M., 2007b. Preparation of glyceryl monostearate-based particles by PGSS®--Application to caffeine. The Journal of Supercritical Fluids. 43, 120-125.

Santos, N.C., Castanho, M.A.R.B., 2002. Lipossomas: a bala mágica acertou? Química Nova. 25, 1181-1185.

Sarmento, B., Martins, S., Ferreira, D., Souto, E.B., 2007. Oral insulin delivery by means of solid lipid nanoparticles. International Journal of Nanomedicine. 2, 743-749.

Secuianu, C., Feroiu, V., Geana, D., 2008. Phase behavior for carbon dioxide + ethanol system: experimental measurements and modeling with a cubic equation of state. Journal of Supercritical Fluids. 47, 109-116.

Sekhon, B.S., 2010a. Supercritical fluid technology: an overview of pharmaceutica applications. International Journal of PharmTech Research. 2, 810-826.

Sekhon, B.S., 2010b. Supercritical Fluid Technology: An Overview of Pharmaceutical Applications. International Journal of PharmTech Research. 2, 810-826.

Severino, P., Andreani, T., Macedo, A.S., Fangueiro, J.F., Santana, M.H., Silva, A.M., Souto, E.B., 2012. Current State-of-Art and New Trends on Lipid Nanoparticles (SLN and NLC) for Oral Drug Delivery. Journal of Drug Delivery. 2012, 750891.

Shaji, J., Patole, V., 2008. Protein and peptide drug delivery: oral approaches. Indian Journal of Pharmaceutical Sciences. 70, 269-277.

Sharma, A., Sharma, U., 1997. Liposomes in drug delivery: progress and limitations. International Journal of Pharmaceutics. 154, 123-140.

Shekunov, B.Y., Chattopadhyay, P., Seitzinger, J., 2006a. Engineering of composite particles for drug delivery using supercritical fluid technology, in: S. Svenson (Eds.), Polymeric Drug Delivery II. ACS Division of Polymeric Materials: Science and Engineering Inc., pp. 234-249.

Shekunov, B.Y., Chattopadhyay, P., Seitzinger, J., Huff, R., 2006b. Nanoparticles of poorly water-soluble drugs prepared by supercritical fluid extraction of emulsions. Pharmaceutical Research. 23, 196-204.

Shoyele, S., Cawthorne, S., 2006. Particles engineering techniques for inhaled biopharmaceuticals. Advanced Drug Delivery Reviews. 58, 1009-1029.

Silva, C., Ribeiro, A., Ferreira, D., Veiga, F., 2003. Administração oral de peptídios e proteínas: III. Aplicação à insulina. Revista Brasileira de Ciências Farmacêuticas. 39, 21-40.

Skoza, F., Papahadjopoulos, D., 1980. Comparative properties and methods of preparation of lipid vesicles (liposomes). Annual Reviews of Biophysics and Bioengeneering. 9, 467-508.

Storm, G., Crommelin, D.J.A., 1998. Liposomes: quo vadis? Pharmaceutical Science & Technology Today. 1, 19-31.

Strumendo, M., Bertucco, A., Elvassore, N., 2007. Modeling of particle formation processes using gas saturated solution atomization. Journal of Supercritical Fluids. 41, 115-125.

Takeuchi, H., Matsui, Y., Yamamoto, H., Kawashima, Y., 2003. Mucoadhesive properties of carbopol or chitosan-coated liposomes and their effectiveness in the oral adminstration of calcitonin to rats. Journal of Controlled Release. 86, 235-242.

Takeuchi, H., Yamamoto, H., Niwa, T., Hino, T., Kawashima, Y., 1996. Enteral absorption of insulin in rats from mucoadhesive chitosan-coated liposomes. Pharmaceutical Research. 13, 896-901.

Thies, C., Ribeiro dos Santos, I., Richard, J., VandeVelde, V., Rolland, H., Benoit, J.P., 2003. A supercritical fluid-based coating technology. 1: process considerations. Journal of Microencapsulation. 20, 87-96.

Trotta, M., Cavalli, R., Carlotti, M.E., Battaglia, L., Debernardi, F., 2005. Solid lipid micro-particles carrying insulin formed by solvent-in-water emulsion-diffusion technique. International Journal of Pharmaceutics. 288, 281-288.

Ulrich, A.S., 2002. Biophysical aspects of using liposomes as delivery vehicles. Biosci Rep. 22, 129-50.

Vezzù, K., Borin, D., Bertucco, A., Bersani, S., Salmaso, S., Caliceti, P., 2010a. Production of lipid microparticles containing bioactive molecules functionalized with PEG. The Journal of Supercritical Fluids. 54, 328-334.

Vezzù, K., Borin, D., Bertucco, A., Bersani, S., Salmaso, S., Caliceti, P., 2010b. Production of lipid microparticles containing bioactive molecules functionalized with PEG. Journal of Supercritical Fluids. 54, 328-334.

Vezzù, K., Campolmi, C., Bertucco, A., 2009. Production of Lipid Microparticles Magnetically Active by a Supercritical Fluid-Based Process. International Journal of Chemical Engineering. 2009, 1-9.

Wang, T., Deng, Y., Geng, Y., Gao, Z., Zou, J., Wang, Z., 2006. Preparation of submicron unilamellar liposomes by freeze-drying double emulsions. Biochimica et Biophysica Acta. 1758, 222-231.

Wang, X., Chen, H., Guo, Y., Su, Y., Wang, H., Li, J., 2008a. Preparation of ibuprofen/lipid composite microparticles by supercritical fluid technique. Frontiers of Chemical Engineering in China. 2, 361-367.

Wang, X., Chen, H., Guo, Y., Su, Y., Wang, H., Li, J., 2008b. Preparation of ibuprofen/lipid composite microparticles by supercritical fluid technique. Frontiers of Chemical Engineering in China 2, 361–367.

Weidner, E., Knez, Ž., Novak, Z., 1995. Process for preparing particles of powders, European Patent, 744922.

Weidner, E., Knez, Ž., Novak, Z., 2000. Process for preparing particles of powders, U.S. Patent, 6056791.

Wen, Z., Liu, B., Zheng, Z., You, X., Pu, Y., Li, Q., 2010. Preparation of liposomes entrapping essential oil from *Atractylodes macrocephala* Koidz by modified RESS technique. Chemical Engineering Research and Design. 88, 1102-1107.

Wissing, S.A., Kayser, O., Müller, R.H., 2004. Solid lipid nanoparticles for parenteral drug delivery. Advanced Drug Delivery Reviews. 56, 1257-1272.

Woods, S.C., Jr., D.P., Bobbioni, E., Ionescu, E., Sauter, J.-F., Rohner-Jeanrenaud, F., Jeanrenaud, N., 1985. Insulin: its relationship to the central nervous system and to the control of food intake and body weight. The American Journal of Clinical Nutrition. 42, 1063-1071.

Wu, Z.H., Ping, Q.N., Song, Y.M., Lei, X.M., Li, J.Y., Cai, P., 2004. Studies on the insulin-liposomes double-coated by chitosan and chitosan EDTA conjugates. Acta Pharmaceutica Sinica. 39, 933-938.

Xia, F., Hu, D., Jin, H., Zhao, Y., Liang, J., 2012. Preparation of lutein proliposomes by supercritical anti-solvent technique. Food Hydrocolloids. 26, 456-463.

Xia, F., Jin, H., Zhao, Y., Guo, X., 2011. Supercritical antisolvent-based technology for preparation of vitamin D_3 proliposome and its characteristics. Chinese Journal of Chemical Engineering. 19, 1039-1046.

Xu, H.-N., He, C.-H., 2007. Extraction of isoflavones from stem of *Pueraria lobata (Willd.)* Ohwi using *n*-butanol/water two-phase solvent system and separation of daidzein. Separation and Purification Technology. 56, 85-89.

Yamaguchi, Y., Takenaga, M., Kitagawa, A., Ogawa, Y., Mizushima, Y., Igarashi, R., 2002. Insulin-loaded biodegradable PLGA microcapsules: initial burst release controlled by hydrophilic additives. Journal of Controlled Release. 81, 235-249.

Yamamoto, A., Taniguchi, T., Rikyuu, K., Tsuji, T., Fujita, T., Murakami, M., Muranishi, S., 1994. Effect of various protease inhibitors on the intestinal absorption and degradation of insulin in rats. Pharmaceutical Research. 11, 1496-1500.

Yang, T.-Z., Wang, X.-T., Yan, X.-Y., Zhang, Q., 2002. Phospholipid deformable vesicles for buccal delivery of insulin. Chemical & Pharmaceutical Bulletin. 50, 749-753.

Yeo, S.-D., Kiran, E., 2005. Formation of polymer particles with supercritical fluids: a review. Journal of Supercritical Fluids. 34, 287-308.

Zhang, N., Ping, Q.N., Huang, G.H., Xu, W.F., 2005. Investigation of lectin-modified insulin liposomes as carriers for oral administration. International Journal of Pharmaceutics. 294, 247-259.

Zhang, Y., Wei, W., Lv, P., Wang, L., Ma, G., 2011. Preparation and evaluation of alginate-chitosan microspheres for oral delivery of insulin. European Journal of Pharmaceutics and Biopharmaceutics. 77, 11-19.

Zhu, L., Lan, H., He, B., Hong, W., Li, J., 2010a. Encapsulation of Menthol in Beeswax by a Supercritical Fluid Technique. International Journal of Chemical Engineering. 2010, 1-7.

Zhu, L., Lan, H., He, B., Hong, W., Li, J., 2010b. Encapsulation of menthol in beeswax by supercritical fluid technique. International Journal of Chemical Engineering. 2010, 1-7.

Zimmermann, E., Müller, R.H., 2001. Electrolyte and pH-stabilities of aqueous solid lipid nanoparticles (SLN^{TM}) dispersions in artificial gastrointestinal media. European Journal of Pharmaceutical Sciences. 52, 203-210.

Attachment I – Published Review of Literature

Characteristics of lipid micro- and nanoparticles based on supercritical formation for potential pharmaceutical application

I. Espírito Santo[1,*], A. São Pedro[1], R. Fialho[1], E. C. Albuquerque[1]

[1] *PEI (Programa de Engenharia Industrial) – Escola Politécnica – Universidade Federal da Bahia, Rua Prof. Aristides Novis, 02, Federação, 40210-630, Salvador, Bahia, Brazil.*

Keywords: liposomes, solid lipid nanoparticles, supercritical carbon dioxide

*Corresponding author. Tel.: +55 7132839804 fax: +55 7132839801.
E-mail address: islane@gmail.com

Abstract

It is already known the interest of the pharmaceutical industry in lipid drug delivery systems, due to their prolonged release profile, biocompatibility, reduction of side effects, and so on. However, conventional methods of preparation of these structures difficult their use and production for the pharmaceutical industry, since these methods are usually multi-steps and with high amount of organic solvent involved. Furthermore, some processes need extreme conditions, which can lead to an increase of heterogeneity of particle size and degradation of the drug. An alternative for drug delivery systems production is the utilization of supercritical fluids technique. Lipid particles produced by supercritical fluid have shown different physicochemical properties in comparison to lipid particles produced by classical methods. Such particles have shown more physical stability and narrower size distribution. So, in this

This article was published at Nanoscale Research Letters, 2013, 8:386-402; DOI: 10.1186/1556-276X-8-386

paper, a critical overview of supercritical fluids based processes for the production of lipid micro- and nanoparticles is given and the most important characteristics of each process are highlighted.

1. Introduction

Nowadays, the utilization of supercritical fluid based technology is considered as a promising substitute to the traditional methods of particle production, since it is an efficient and environmental-friendly technique. Supercritical fluids are defined as substances for which both temperature and pressure are above critical values. Beyond this point, the liquid and gas phases becomes indistinguishable because the density of the phases are identical, existing only a homogeneous medium (Pasquali and Bettini, 2008).

Supercritical fluids have many industrial applications, including chemical reactions, extraction of essential oils, supercritical chromatography, manufacturing of semiconductors, micronization of pharmaceutical excipients, production of drug delivery systems and so on (Majerik, 2006; Yeo and Kiran, 2005). The most widely used supercritical fluid in drug delivery applications is carbon dioxide (CO_2) because of a low critical temperature of 304K and a moderate critical pressure of 7.3MPa. It is non-flammable, non-toxic and environmental friendly; it is miscible with a variety of organic solvents and is readily recovered after processing. It is also a small and linear molecule and thus diffuses faster than conventional liquid solvents.

Supercritical carbon dioxide ($scCO_2$) offers a wide range of possible applications on pharmaceutical field (Sekhon, 2010a), which allows the

processing of bioactive compounds under mild operation conditions avoiding their degradation (Barry et al., 2006). The use of CO_2 as solvent or raw material has been investigated in academia and/or industry since 1950 and has intensified thirty years later with implementation of large-scale plants using on line systems (Beckman, 2004). The approaches for processing bioactive compounds include mainly the particle size reduction of bulk products to nanometer scale (Martín and Cocero, 2008) and association of drug molecules to particulate carriers (Reverchon et al., 2009a).

CO_2 molecule possess no dipole moment, which means that it is nonpolar and, when it is in supercritical state, CO_2 can be a good solvent to solubilize nonpolar substances. However, CO_2 possess a quadrupole moment, which enables the dissolution of some polar and slightly polar compounds at high pressures (Mukhopadhyay, 2000; Shoyele and Cawthorne, 2006). So, the $scCO_2$ presents a substantial solubility on polymers and lipids, typical drug carriers. The solubilization of $scCO_2$ promotes the decrease on viscosity of the molten drug carrier making possible their bombing through the plant (Nalawade et al., 2006).

Other significant advantages of supercritical fluid processing include the non-inflammability, its relative low cost, the possibility of its total recycling, the production of organic solvent-free particles, the achievement of particulate systems with a narrow distribution of particle size and the performing of one-step operation. Furthermore, all process runs into a closed system facilitating the establishment of ascetical production of sterile formulations (Beckman, 2004; Foster et al., 2003; Manosroi et al., 2008)

2. Liposomes

Liposomes are colloidal associations of amphiphilic lipids that organize themselves spontaneously in bilayer vesicles as result of unfavorable interactions between phospholipids and water. As they have lipophilic and hydrophilic portions, liposomes can entrap substances with varying lipophilicities in the phospholipid bilayer, in the aqueous compartment or either at the bilayer interface (Imura et al., 2003; Joshi and Müller, 2009; Sharma and Sharma, 1997) which can modify physicochemical properties and enhance the biological activity of the compounds (Gortzi et al., 2007).

As liposomes are composed by phospholipids, they have interesting physical and chemical properties, such as osmotic activity, permeability of their membranes to different solutes and also the capacity of interaction with the membranes of different cell types (Lasic, 1993). They also have the ability of minimize side effects of drugs, protect them from degradation, specific targeting and biocompatibility (Mohanraj et al., 2010).

The selection of the method of production of liposomes is related to the materials or the lipid composition of the vesicles that will be used. The starting point for all the conventional methods of liposomes production is the dissolution of phospholipids in an organic solvent and the main difference between these methods is the way in which the lipid membrane is dispersed in aqueous media (Bangham, 1963; Batzri and Korn, 1973; Detoni et al., 2012; Justo and Moraes, 2011; Kim and Jeong, 1995; Wang et al., 2006). These methods have some drawbacks in common, such as the large amount of steps that are needed to

produce the vesicles, the utilization of a large amount of organic solvent in the beginning or during the process, the lack of uniformity of size diameter and, moreover, the low stability of produced particles (Lesoin et al., 2011d). To overcome these drawbacks, the utilization of supercritical fluid is an alternative to produce these nanoparticles.

3. Liposomes production by $scCO_2$ processing

As aforementioned, the supercritical fluid technology is an interesting alternative for production of safer and more stable drug delivery particles. Indeed, the utilization of supercritical fluid technology in the production of liposomes entrapping pharmaceuticals and biopharmaceuticals is a promising field under intense investigation. Table 1 summarizes different methods to produce liposomes using supercritical fluids.

Table 1. Different supercritical fluids methods utilized for liposomes production.

Method	Phospholipid composition	Active ingredient	Particle size	Ref
Supercritical liposome method	Phosphatidylcholine, phosphatidylserine and cholesterol	FITC-dextran and TSZnPc	~200nm	(Frederiksen et al., 1997)
Rapid expansion of supercritical solution process (RESS)	Phosphatidylcholine and cholesterol	*Atractylodes macrocephala* essential oil	~173nm	(Wen et al., 2010)
Depressurization of an expanded solution into aqueous media	Diastearoylphosphatidylcholine (DSPC) and cholesterol	---	50 - 200nm	(Meure et al., 2009)

(DESAM)				
Solution enhanced dispersion by supercritical fluid process (SEDS)	Soy phospholipids	Puerarin	1□m	(Li et al., 2008a, 2008b)
Gas anti-solvent process (GAS)	Soy phospholipids	---	---	(Li et al., 2008b)
	Phosphatidylcholine and cholesterol	Amphotericin-B	0.5 - 3□m	(Kadimi et al., 2007)
Aerosol solvent extraction system (ASES)	Phosphatidylcholine and cholesterol	Miconazole	DNS	(Kunastitchai et al., 2006)
Supercritical anti-solvent process (SAS)	Lecithins S20, S75, S100	---	1 - 40 µm	(Badens et al., 2001)
	Lecithin S75	---	1 - 40 µm	(Magnan et al., 2000)
	Lecithin S75	Fluorescent markers	0.1 - 100µm	(Lesoin et al., 2011d)
	Hydrogenated soy phosphatidylcholine, soy phosphatidylcholine and cholesterol	Docetaxel	200 - 300nm	(Naik et al., 2010)
	Hydrogenated soy phosphatidylcholine	Vitamin D3	1□m	(Xia et al., 2011)
	Hydrogenated soy phosphatidylcholine	Lutein	200 – 500nm	(Xia et al., 2012)
Continuous anti-solvent process (CAS)	Soy lecithin	---	0.1 - 100µm	(Lesoin et al., 2010a; Lesoin et al., 2011b)
Supercritical reverse phase	Dipalmitoylphosphatidylcholine	Glucose and cholesterol	0.1 - 1.2□m	(Otake et al., 2001)

evaporation (scRPE)				
	Phosphatidylcholine, phosphatidylethanolamine, phosphatidylinositol, and phosphatidic acid	Glucose and cholesterol	0.1 – 1.2□m	(Imura et al., 2002)
	Phosphatidylcholine and dioleoylphosphatidylcholine	Glucose	0.1 – 1.2□m	(Imura et al., 2003)
Improved supercritical reverse phase evaporation (IscRPE)	Dipalmitoylphosphatidylcholine	Glucose	1.5□m	(Otake et al., 2006a, 2006b)

DNS: Data not shown

3.1. Supercritical liposome method

Frederiksen *et al.* (Frederiksen et al., 1997) created a laboratory method aiming the production of liposomes encapsulation water soluble compounds utilizing $scCO_2$ as an alternative of the utilization of large amounts of organic solvents. The apparatus developed for this method is depicted in Figure 1 and it is divided in two parts: a high and a low pressure systems that possess a recycling loop each and that are connected by a capillary. The presence of this capillary before the low pressure system allows the addition of the aqueous solution in the bulk of phospholipid solution, which increases the encapsulation of water soluble compounds into liposomes. Briefly, phospholipids and cholesterol were added into the high pressure system and dissolved in $scCO_2$ and ethanol. Then they were kept into the recycling loop for 30min at 25MPa and 333K to ensure an effective dissolution of the lipids and guarantee a homogeneous solution. After that, the solution was leaded to the low pressure system in order to expand. According to the authors, there is formation of foam

during the expansion of the supercritical fluid in presence of aqueous solution. In order to suppress the foam formation, a static mixer was added to the recycling loop. Thereafter the expansion, lipids were precipitated, brought in contact with the aqueous solution and kept into recycling for other 30min in order to form liposomes. Liposomes obtained by this process presented bimodal distribution with average size of 200nm and this method used 15 times less organic solvent to get the same encapsulation efficiency as conventional techniques. However, the encapsulation efficiency of hydrophilic compounds into liposomes was about 15%, which is about 50% less then encapsulation of water soluble compounds in liposomes made by DRV or reverse phase evaporation methods. Due to the complexity of this process, there are no other studies involving liposome production by this method.

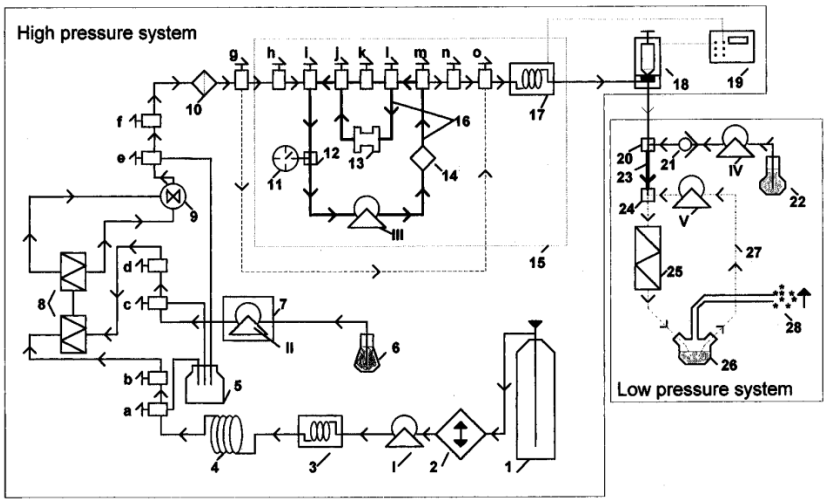

Figure 3. Schematic representation of the apparatus utilized by Frederiksen (Frederiksen et al., 1997), that is composed by: (I) CO_2 pump, (II) modifier pump, (III) high-pressure recycling pump, (IV, 4) pulse dampener capillary; (V) low pressure recycling pump; (1) CO_2 cylinder; (2) cooling device; (3, 11) manometer; (5) waste flask; (6)

measuring cylinder; (7) pump T-piece; (9) dynamic mixer; (10) filter; (12, 20, 24) T-piece; (13) cartridge guard column; (14) UV detector; (15) Plexiglas water bath; (16) high-pressure recycling system; (17) pressuring transducer; (18) back pressure regulator; (19) pressure controller; (21) check valve; (23) encapsulation capillary; (25) static mixer; (26) liposomal suspension reservoir; (27)low –pressure recycling system; (28) fume cupboard to remove CO_2; (a, b, c, d, e, f, g, h, i, k, j, l, m, n, o) valves.

3.2. Rapid expansion of supercritical solution process (RESS)

RESS process consists of the saturation of $scCO_2$ with the solute followed by a rapid expansion of the solution through a heated nozzle to a low pressure chamber. The rapid expansion/decompression is achieved by allowing into pass through a nozzle at supersonic speeds. The decrease of the pressure forces the evaporation of CO_2, leading to the supersaturation and then precipitation of the solid, that is collected from the gaseous stream (Antunes, 2007; Bahrami and Ranjbarian, 2007).

This supercritical process is not suitable to produce these lipid vesicles because (i) phospholipids are not completely soluble in pure $scCO_2$ and (ii) liposomes only can be completely formed in aqueous medium. Thus Wen *et al.* (Wen et al., 2010) developed some modifications in conventional RESS process to produce liposomes. The schematic representation of the apparatus is depicted in Figure 2. Phosphatidylcholine, cholesterol and the essential oil of *Atractylodes macrocephala* Koidz were dissolved in a mixture of $scCO_2$/ethanol and, after the system reached the equilibrium, a buffer solution was injected by a syringe pump into the dissolved solutes. The final mixture was expanded

through a nozzle into the collector to evaporate CO_2. According to the authors, liposomes formed by this method presented good physicochemical characteristics and the higher encapsulation efficiency was obtained with pressures up to 20MPa, temperatures of 323-338K and ethanol mole fractions in $scCO_2$ of 5-15%. The optimization of the method provided liposomes with spherical morphology, narrow size distribution with an average size of 173nm, and encapsulation efficiency of 82.18% at 30MPa, 338K and ethanol amount of 15%.

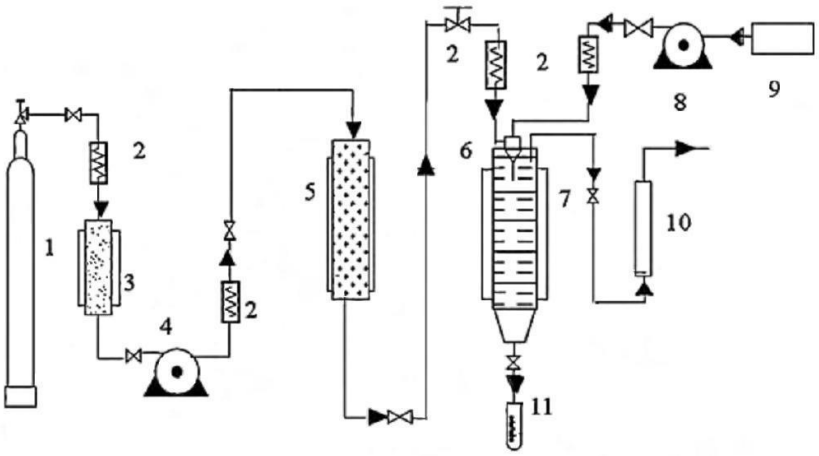

Figure 4. Schematic representation of RESS apparatus used by Wen *et al.* (Wen et al., 2010) to produce liposomes. In this apparatus: (1) CO_2 cylinder, (2) heat exchanger, (3) refrigerating machine, (4, 8) syringe pump, (5) reactor, (6) coaxial injector, (7) collector, (9) storage tank, (10) rotameter, (11) volumetric cylinder.

3.3. Depressurization of an expanded solution into aqueous media (DESAM)

Meure *et al*. (Meure et al., 2009) developed a process that can remove almost every organic solvent added into the system and also works at mild

conditions - moderate temperatures and pressures below 6MPa. In this technique, a fast and simple process for bulk liposome formation was developed. Phospholipids were initially dissolved in organic solvents – ethanol or chloroform. Then, CO_2 was sparged into the system with a syringe pump in order to form an expanded lipid solution inside the expansion chamber. This expansion occurs because the gas rapidly diffuses into the solution, promoting the phenomenon. After that, the expanded lipid solution was atomized through a nozzle into a heated aqueous media. When ethanol was utilized to dissolve the lipids, the expansion chamber parameters were 295K and 5.0-5.5MPa; while the parameters were 294K and 3.8-4.0MPa when chloroform was utilized. According to the authors, the residual solvent concentration was less than 4% v/v in all liposomes preparations. This value is less then another supercritical method, that had values of residual solvent volume fraction of 14-17% v/v (Frederiksen et al., 1997).The apparatus depicted in Figure 3 was utilized to perform the experiments of production of liposomes from 50 to 200nm.

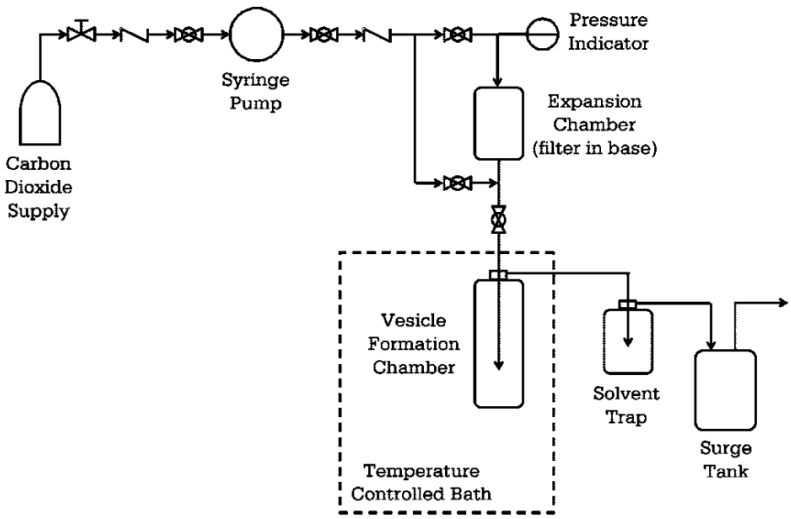

Figure 5. Apparatus utilized for DESAM process developed by Meure *et al.* (Meure et al., 2009).

3.4. Solution enhanced dispersion by supercritical fluid process (SEDS)

Li et al. (Li et al., 2008a, 2008b) implemented a method of production of phospholipid complex encapsulating puerarin utilizing SEDS process in a semi-continuous operation. In SEDS process, the supercritical fluid acts not only as an anti-solvent, but also as a dispersion medium. The solution is provided from the outer passage and dispersed by the supercritical fluid which is quickly introduced in the inner passage. Due to the presence of a premixing chamber in the inner nozzle, solution and anti-solvent can be molecular dispersed before the formation of the solution jet. This contact of supercritical fluid and liquid solution streams leads to the generation of a finely dispersed mixture followed by particle precipitation (Majerik, 2006; Yeo and Kiran, 2005). Furthermore, as it is an efficient single-step, totally enclosed and easily to scale-up process, it can produce more homogeneous particles for drug delivery systems.

So, for liposome production (Li et al., 2008a, 2008b), phospholipid complex is defined as the presence of active substances inside phsospholipid vesicles at solid state. The representation of the apparatus is depicted in Figure 4. Puerarin is an isoflavone and one of the major constituents of *Pueraria lobata (wild.)* Ohwi, a plant utilized in tradicional medicine (Xu and He, 2007). Organic liquid solution of puerarin and soy phospholipids was added co-currently with CO_2 by two syringe pumps into the particle formation vessel. CO2 and liquid solution were sprayed into the vessel through a coaxial nozzle. A high flow rate of CO_2 was utilized to promote the mixture of the organic solution with $scCO_2$.

Therein the organic solvents utilized are dispersed from the bulk of the solution, leading to the extraction of the solvents and the precipitation of the particles. Temperature range of 303-313K, pressure range of 8-12 MPa, CO_2 flow rate of 25-65 mL.min^{-1} and proportion of flow rate of the solution to scCO2 from 1 to 5% were chosen by the authors to be the operation parameters; which were optimized at 308K, 10MPa, CO_2 and the solution to scCO_2 flow rates at 45mL.min^{-1} and 1% respectively. Under this optimized conditions, puerarin – phospholipid vesicles complex of 1□m and agglomerates of 5.93μm were obtained. This process showed to be efficient in the production of micrometric phospholipid complexes in just one step. However, the authors did not measure the residual solvent concentration in the particle, to ensure that the particles were almost free of solvents.

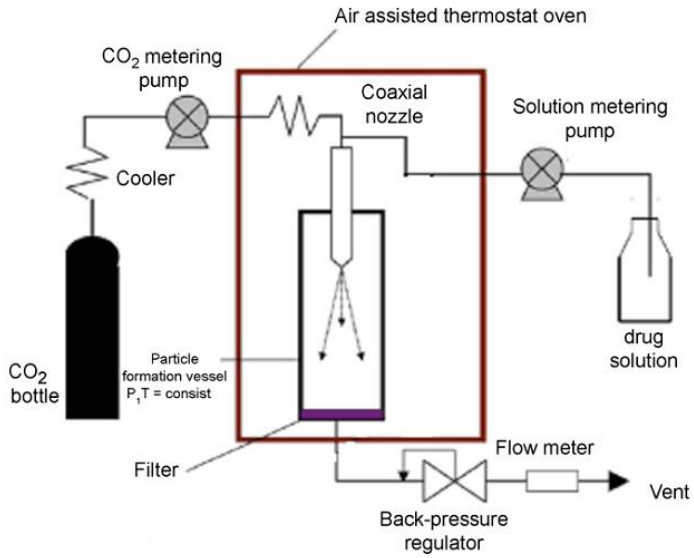

Figure 6. Representation of SEDS process apparatus utilized by Li *et al.* (Li et al., 2008b).

3.5. Gas anti-solvent process (GAS)

In gas anti-solvent (GAS), compressed gas is gradually introduced into a liquid solution. This ability of solubilize large amount of gases is the basis of this technique. This solubilization leads to a volumetric expansion of the liquid phase followed by a decrease of the liquid solvent strength, resulting in the precipitation of small particles of the solute. The major advantage of GAS process is the possibility of processing a wide range of compounds and, also, the possibility of control the particle size and distribution. However, as particles are produced in a liquid medium, it is required another stage for drying the particles (Kompella and Koushik, 2001; York et al., 2004).

Taking GAS process characteristics into account, Li *et al*. (Li et al., 2008b) also tried to produce phospholipid complex with puerarin by this method. But instead of using a semi-continuous configuration as used in SEDS process, the plant was utilized in a batch configuration. The apparatus utilized by the authors was the same depicted in Figure 4 with one modification – the ethanolic or chloroformic liquid solution was added into the particle formation vessel before it was closed, instead of pumping the solution into the chamber. So, one syringe pump was not used to perform this process. After the addition of the solution, the $scCO_2$ was pumped into the vessel and left for 3h without agitation at 10MPa and 311K. The flow rate of CO_2 was maintained constant during the experiment in order to remove the organic solvents of the solution and the slow depressurization of the system occurred at the same temperature of the experiments. However, this process was not able to produce phospholipid complexes.

In another study, Kadimi *et al*. (Kadimi et al., 2007) produced liposomes at 15.0MPa and 333K encapsulating amphotericin B based on the GAS process. The vesicles efficacy was tested against *Aspergillus fumigatus*. Briefly, solutions of phospholipids, chloroform and methanol were loaded into an autoclave. Then, CO_2 was pumped till the pressure arrived 15.0MPa and the temperature was set at 333K. The compressed CO_2 was released into the autoclave. After the equilibration period, a saline solution was pumped into the autoclave, to induce the liposome formation, and then, the vessel was slowly depressurized. Also, in order to compare the results from different methods, liposomes were also produced by thin film hydration (Bangham, 1963). Liposomes produced by supercritical technique were smaller (0.15 - 3□m for GAS method against 0.15 - 6□m by thin film hydration), with better morphology and size distribution then the vesicles made by the conventional method. Also, vesicles made by the GAS process presented better antifungal activity against *A. fumigatus* strain, with an encapsulation efficiency of 25 – 30% of amphotericin-B.

3.6. Aerosol solvent extraction system (ASES)

Kunastitchai *et al.* (Kunastitchai et al., 2006) applied ASES process to produce liposomes entrapping miconazole, an imidazole antifungal agent. The production of these liposomes was made in two steps: (i) obtaintion of a miconazole-phospholipid complex by ASES and (ii) further hydration with aqueous phosphate buffer in order to form the phospholipid vesicles. Different amounts of miconazol (19% and 38%) and ratios of

phosphatidylcholine/cholesterol (8:2 and 10:0, w/w) were dissolved in a mixture of methanol/methylene chloride (2:8 w/w) with or without the addition of poloxamer 407. These solutions were sprayed through a nozzle with diameter of 0.4mm into a high pressure vessel filled with $scCO_2$ to remove the organic solvents and precipitate the dried liposomes. In order to optimize the process of liposome formation, temperature, pressure and CO_2 density ranges used were 308-328K, 8.5-10.5MPa and 0.30-0.50g.mL^{-1}, respectively. The CO_2 flow rate was 6kg.h^{-1} and spraying rate was 6mL.min^{-1}. After the atomization, the solution was washed with $scCO_2$ in order to extract the remaining organic solvents. Then, it was hydrated with phosphate buffer at different pHs (4.0 and 7.2) and submitted to gentle agitation at 328K. According to the authors, the percentage yield of liposome formation was higher when the temperature used was 308K and the CO_2 density 0.30g.mL^{-1}. Therefore, the optimized parameters utilized were 308K, 8.0MPa and 0.30g.mL^{-1}.

3.7. Supercritical anti-solvent process (SAS)

Supercritical anti-solvent process (SAS) is the most popular precipitation process involving supercritical anti-solvent due to the wide range of compounds that can be used, the control of particle size and distribution and the facility of adaptation for a continuous operation (Antonacci, 2007; Yeo and Kiran, 2005). Basically, the compound is dissolved in a liquid solvent and sprayed to a chamber that already has supercritical fluid, leading to a rapidly contact of them. This contact causes supersaturation of the solution and then fast nucleation

and, consequently, diffusion of the anti-solvent in the liquid phase and formation of small particles (Reverchon et al., 2009b; Villiers et al., 2009).

Badens *et al* (Badens et al., 2001) and Magnan *el al.* (Magnan et al., 2000) produced liposomes from three different lecithins: S20, S75 and S100. These lecithins contained different amounts of phosphatidylcholine, phosphatidylethanolamine and phosphatidylinositol. Different operation parameters were analyzed by this study, such as pressure (8.0 – 12.0MPa), temperature (303 – 323K), and liquid solution flow-rate (10 – 40 $mL.h^{-1}$). CO_2 flow rate value was maintained constant during all the experiments. The vesicle formed had size diameter between 1 - 40 µm, spherical shape, partly agglomerated and seems to be free of solvent free, according to infrared analysis. The apparatus that was used for these studies is depicted in Figure 5.

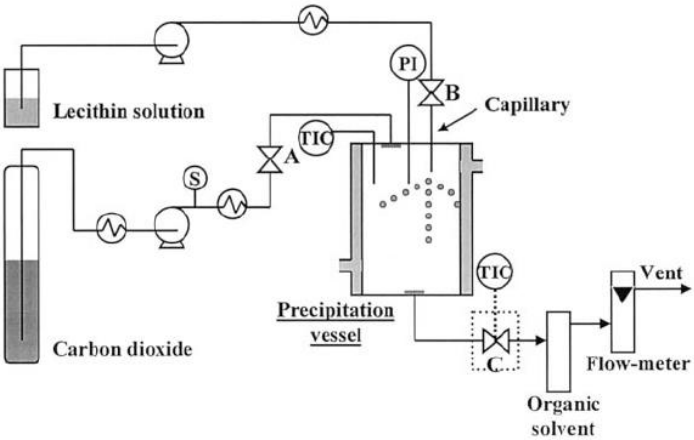

Figure 5. The SAS apparatus utilized for the production of liposomes (Magnan et al., 2000).

Lesoin *et al.* (Lesoin et al., 2011d) compared liposomes produced by SAS and the thin film hydration methods in an apparatus similar to the one

depicted in Figure 5. According to the authors, the vesicles produced by supercritical fluids presented spherical shape, bimodal size distribution in the range of 0.1 – 100□m and encapsulation efficiency of fluorescent markers of 20%. However, the ellipsoidal vesicles made by the traditional method seemed to be more dispersed, but this method has serious issues of reproducibility and repeatability, which makes the supercritical process more attractive than the conventional one.

Another interesting study described the production of PEGylated liposomes using the SAS process to encapsulate docetaxel, one of the most important chemotherapeutic agents against cancer. Hydrogenated soy PC, soy PC and cholesterol in different proportions were utilized to produce the vesicles with DSPE-PEG_{2000}. The utilization of saturated and unsaturated phospholipids enhanced the liposomal stability in about 3 months with high entrapment efficiency. So, docetaxel and the phospholipids were dissolved in chloroform and methanol. This solution was sprayed into a high pressure vessel where, then, the operational temperature and pressure were set. Once the system reached the steady state, the lipid solution was pumped into the chamber that had the $scCO_2$ to permit the mixing of the phases and, consequently, precipitating the lipid particles in the vessel. The vesicles formed were small unilamellar with a range of size between 200 – 300nm. *In vitro* release studies showed that the vesicles presented controlled drug release during 48h. There was found no residual organic solvent in the end of the preparation. The authors concluded that PEGylated liposomes produced by supercritical fluid technology

are more stable, with smaller size and free from residual organic solvent (Naik et al., 2010).

Xia *et al.* (Xia et al., 2012; Xia et al., 2011) produced proliposomes using the supercritical anti-solvent process. It was shown that the proliposomes, which are dry free-flowing particles, have a media size of 200nm with a narrow size distribution. The elevated pressure utilized in the system (8.0 – 12.0MPa) favors the formation of small molecules. After the hydration, the formed liposomes encapsulating lutein had size about 500nm, while vesicles encapsulating vitamin D3 presented 1□m, approximately. The authors affirms that the proliposomes are easily hydrated, producing unilamellar liposomes. The vesicles formed by supercritical fluids have entrapping efficiency of lutein and vitamin D3 that reaches 90%, each.

3.8. Continuous anti-solvent process (CAS)

Lesoin *et al.* (Lesoin et al., 2010a; Lesoin et al., 2011b) developed a new single-step supercritical process to produce liposomes called continuous anti-solvent process (CAS). Two different procedures were developed for this method: CAS1 and CAS2. The difference between the processes is the amount of exits: while CAS1 is a single exit process, CAS2 has two exits. In CAS1, an initial amount of aqueous phase was added inside the autoclave followed by the injection of CO_2. The organic solution was sprayed to the autoclave while the liquid phase was under stirring. When the phases were in equilibrium, a valve on the bottom of the autoclave was opened, releasing the CO_2 and the liposome suspension. In order to maintain the same amount of liquid inside of

the autoclave, an aqueous solution was injected in a continuous way. On the other hand, in CAS2 method, the aqueous phase was added into the autoclave and then it was filled with CO_2. When the work pressure was reached, the organic solution was added similarly to the CAS1 method. However, when the system seemed to be homogeneous, a valve on the top of the autoclave was open, releasing the CO_2 and the liposomal suspension was recovered from the bottom of the vessel. The mean diameter of liposomes produced by the CAS methods ranged from 0.1 to 100 µm.

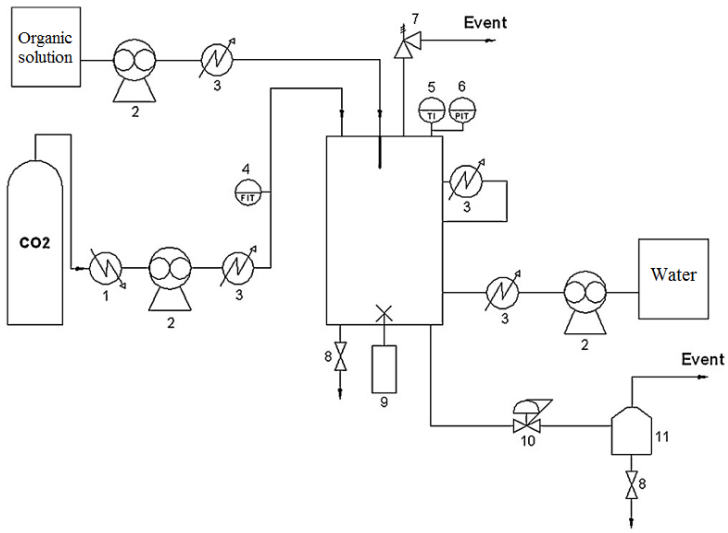

Figure 6. Schematic representation of CAS apparatus utilized by Lesoin *et al.* (Lesoin et al., 2011b). In this apparatus: (1) cooler, (2) volumetric pump, (3) heater, (4) flow indicator transmitter, (5) temperature indicator, (6) back pressure valve, (7) safety valve, (8) release valves, (9) stirring, (10) control valve, (11) drier.

3.9. Supercritical reverse phase evaporation (scRPE) and Improved supercritical reverse phase evaporation (IscRPE)

Developed by Otake *et al.* (Otake et al., 2001), the supercritical reverse phase evaporation is a batch process that consists in a constant mix of phospholipids, ethanol and CO_2 at constant temperature (333K) and pressure (20.0 MPa) values. The temperature value has to be higher than the lipids phase transition in order to ensure the complete dissolution of the lipid in the supercritical phase. Basically, CO_2 was inserted into a cell with variable volume (depicted in Figure 6) after it was already sealed with ethanol and different amounts of DPPC. Than the working temperature and pressure were set and the system was kept in equilibrium for several minutes. After that, an aqueous glucose solution (0.2 $mol.L^{-1}$) was added by and HPLC pump with a flow rate of 0.05 $mL.min^{-1}$. After the solution was completely added, the system was slowly depressurized forming liposomes from 0.1 to 1.2 □m with an encapsulation efficiency of 25% for glucose. In addition, it was also studied the encapsulation efficiency of lipophilic substances and cholesterol was the model molecule utilized. For this substance, the reached encapsulation efficiency was 63%.

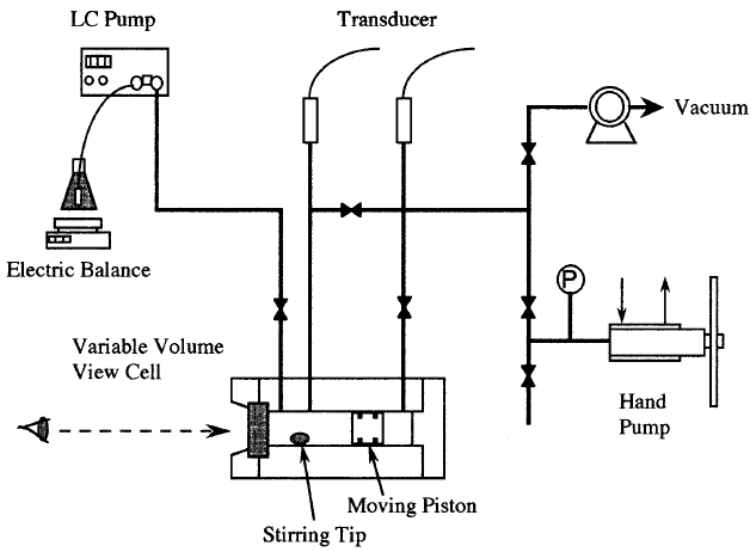

Figure 7. Schematic representation of scRPE apparatus.

In order to investigate if this method was also compatible with other phospholipids than DPPC, Imura *et al.* (Imura et al., 2002) prepared different soybean lecithin-based liposomes. The lipid vesicles produced in this study were constituted of phosphatidylcholine (PC) and three different natural lecithins, which are mixture of PC, phosphatidylethanolamine (PE), phosphatidylinositol (PI), and phosphatidic acid (PA) in different concentrations. Pressure and temperature values were the same used by Otake *et al.* (Otake et al., 2001). It was shown that liposomes from different lecithins can be formed, and, as expected, their size and shape were dependent on the solubility of the lipid in the supercritical phase. Liposomes constituted by PC presented size diameter varying from 0.2 – 1.2 □m and spherical shape, while vesicles formed by a natural lecithin (32% PC, 31% PE, 17% PI and 9% PA) were ellipsoidal vesicles with 0.1 – 0.25 □m of diameter.

Based on these previous results, Imura *et al.* (Imura et al., 2003) decided to improve the encapsulation efficiency of glucose and the stability of the vesicles adding a different phospholipid to the composition, the dioleoylphosphatidylcholine (DOPC). So, liposomes formed by DOPC or DPPC were prepared with pressures between 130 – 30.0MPa and temperature of 333K. It was shown that the maximum glucose entrapping efficiency for lipsoomes made of DOPC was 40% (20.0MPa and 333K) and 20% for DPPC at the same conditions. It can be noticed that the enhancement of entrapping efficiency was not too much significative, if this study is compared with other studies of the group (Otake et al., 2001).

Otake *et al.* (Otake et al., 2006a, 2006b) simplified the scRPE method in order to enhance the liposomes entrapment efficiency. The lipid vesicles were still produced inside a view cell with variable volume, however the organic solvent was excluded of the mixture, generating an inhomogeneous mixture of phospholipids and aqueous solution at the same parameters utilized for the scRPE method. The system was submited to magnetic stirring and then pressurized. After the equilibrium period of 40 min, approximately, the system was depressurized and liposomes with mean diameter of 1.5 m were formed.

4. Solid Lipid Nanoparticles

Created in 90 decade, solid lipid nanoparticles (SLN) are colloidal particles composed by lipids which are solids in ambient temperature. The term lipid includes triglycerides, partial glycerides, fatty acids, steroids and waxes. The drug incorporated into SLN is released on a prolonged profile, thus after administration a constant concentration of the drug molecule can be maintained on blood stream. The maintenance of constant plasma levels implies on possible reduction of side effects and reduces the frequency of doses of pharmaceuticals. The literature has been demonstrated that beyond the composition of lipid matrix, the method of preparation seems to have an important role on the definition of the release mechanism of drug molecule (Almeida and Souto, 2007; Mukherjee et al., 2009; Müller et al., 2000; Severino et al., 2012).

Currently a wide range of techniques for production of SLN are available. Solvent emulsification/evaporation, high pressure homogenization, hot and cold

homogenization have been the most cited. The choice of these processes is favored by their feasibility for scaling up to industry production and relatively low overall costs of operation. On the other hand, these traditional methods are multi-step, generally involve high temperature and shear rates and several cycles at high pressure. These extreme process conditions lead to an increase and heterogeneity of particle size and degradation of the drug. Further, the high kinetic energy content of the obtained particles promotes their coalescence and the presence of organic solvent residues compromises their safety for human use (Mehnert and Mäder, 2001).

5. Solid lipid particles production by $scCO_2$ processing

Considering the broad context on manufacturing limitations of SLN, the supercritical fluid technology appears as a great opportunity to overcome them. Indeed, in this innovative field, the obtention of solid lipid particles at nanometer scale has been a challenging task. Even so, the versatility of supercritical fluid-based plants often offers different solutions for this issue. The table 2 summarizes the different methods applied on production of solid lipid particles with diversified composition.

Table 2. Available works with production of solid lipid particles by supercritical fluid technology

Method	Lipid composition	Active ingredient	Particle size	Ref
Supercritical fluid-based coating	Gelucire® 50/02	Bovine serum albumin	125 - 500µm	(Ribeiro Dos Santos et al., 2002b)
	Trimyristin	Bovine serum	~50µm	(Ribeiro Dos

		albumin		Santos et al., 2002b)
Supercritical fluid extraction of emulsions (SFEE)	Gelucire® 50/13, tripalmitin or tristearin	Indomethacin or ketoprofen	~30nm	(Chattopadhyay et al., 2007a)
Supercritical co-injection process	Precirol® ATO 5	Pseudoephedrine chlorhydrate or bovine serum albumin	~60µm	(Calderone et al., 2008)
Particles from Gas Saturated Solutions (PGSS)	Hydrogenated palm oil	Theophylline	~3µm	(Rodrigues et al., 2004b)
	Glyceryl monostearate	Caffeine	~5µm	(Sampaio de Sousa et al., 2007b)
	Glyceryl monostearate and Cutina® HR	Caffeine, glutathione or ketoprofen	NM	(García-González et al., 2010b)
	Precirol® ATO 5 and/or Gelucire® 50/13	Trans-chalcone	1-6µm	(Sampaio de Sousa et al., 2009)
	Glyceryl monostearate and Cutina® HR	Ketoprofen	NM	(Argemi et al., 2011)
	Precirol® ATO 5	Ascorbic acid	~2µm	
	Myristic acid or Tripalmitin	Ibuprofen	2-4 µm	(Wang et al., 2008a)
	Beewax	Menthol	~2-50µm	(Zhu et al., 2010a)
	Ceramide 3A, Cholesterol and Radiacid®	----	200-500nm	(Semenzato et al., 2006)
	Tristearin and Epikuron 200®	Insulin or recombinant human growth hormone	~197nm	(Salmaso et al., 2009a)
	Tristearin and Epikuron 200® or Tristearin, Epikuron 200	Insulin	80-120nm	(Salmaso et al., 2009b)

	and PEG			
	Tristearin, Epikuron 200® and Oleic acid	Magnetite nanoparticles	200-800nm	(Vezzù et al., 2009)
	Tristearin and Epikuron 200®	Ribonuclease A functionalized or not with PEG_{5000}	4-13 µm	(Vezzù et al., 2010b)

NM: Not measured.

5.1 Supercritical fluid-based coating technique

Benoit *et al.* (Benoit et al., 2000) developed a relatively rapid, simply and totally solvent-free technique for coating drug particles with solid lipid compounds. The same group demonstrated the performance of its proposed method by encapsulation of bovine serum albumin (BSA) crystals with trimyristin and Gelucire® 50/02, a commercial mixture of glycerides and fatty acid esters (Ribeiro dos Santos et al., 2002a). The scheme of the apparatus used is depicted on Figure 8. The mechanism of coated particle formation is composed by the total solubilization of the solid lipid into $scCO_2$ in a thermostatized high pressure mixing chamber loaded with BSA crystals. After 1h of mixing the chamber was depressurized with passage of $scCO_2$ to gas state with consequent precipitation of the lipid on the crystals surfaces. This work was described with more details in other three articles (Ribeiro dos Santos et al., 2003a; Ribeiro dos Santos et al., 2003b; Thies et al., 2003). As Gelucire is a mixture, it does not crystallize, allowing a uniform coating of BSA, while trimirystin crystallizes and forms a needle-like structure around BSA crystals leading to a burst release from the particles. However, this method is restricted to lipids with considerable solubility into $scCO_2$ and the particle size is

dependent from size of the original BSA crystals. Thus to obtain solid lipid particles with a narrow range of size dispersity the bulk drug has to be processed by an additional technique elevating the final cost of whole process.

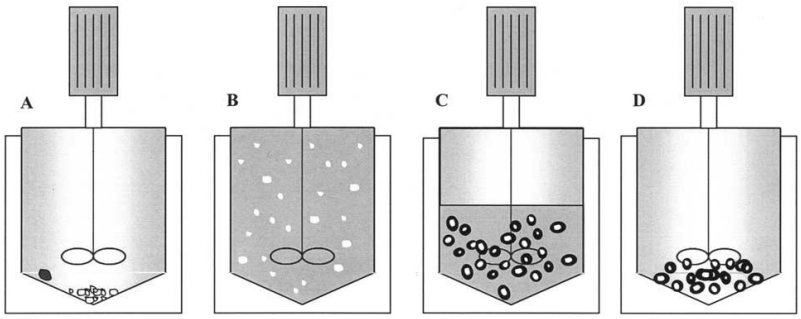

Figure 8. Schematic representation of the coating process developed by Ribeiro dos Santos *et al.* (Ribeiro dos Santos et al., 2002a) (A) Filling step: BSA crystals (white) and lipid material (black); (B) Solubilization of lipid in $scCO_2$ with dispersion of insoluble BSA crystals; (C) Decompression phase with lipid deposition on BSA; (D) Coated particles are obtained.

5.2 Supercritical fluid extraction of emulsions (SFEE)

The SFEE technique, developed by Chattopadhyay and co-workers (Chattopadhyay et al., 2006b) is composed by coupling of a conventional method for oil in water (o/w) emulsion obtention and subsequent extraction process by $scCO_2$. The emulsion is typically prepared by dissolution of a solid lipid and the drug into an organic solvent. This organic solvent is dispersed into the aqueous phase by homogenizer equipment, using a certain surfactant for stabilization. Then, the emulsion is bombed until to be atomizated through a nozzle and submitted to an extraction of the organic solvent by $scCO_2$ in countercurrent flux with consequent solidification of lipid droplets and collection

of aqueous suspension of solid lipid particles (Chattopadhyay et al., 2006b; Shekunov et al., 2006a).

Compared to traditional methods, this technique brings the advantage of improvement of removal of the internal organic phase without affecting the emulsion stability, with shorter processing time, innocuous residual solvent concentration on final product. Furthermore, due to diffusivity features of $scCO_2$ the mass transfer on solvent removal is more efficient in comparison to conventional methods, which lead to a more consistency on particle size distribution, avoiding aggregation. Taking into account the smaller droplet size on primary emulsion, the smaller SLN are obtained, the production of the emulsion represents a pivotal step for achievement of SLN with narrow size range (Chattopadhyay et al., 2005; Obeidat, 2009; Shekunov et al., 2006b).

Figure 9 describes the extraction plant used by Chattopadhyay *et al.* (Chattopadhyay et al., 2007b) for production of SLN constituted by tripalmitin, tristearin or Gelucire 50/13. After preparation of an o/w emulsion with oil phase composed by the drug and lipid dissolved into chloroform, the solvent was extracted with $scCO_2$ counter-corrently at a flow rate of $40 g.min^{-1}$. SLN with a mean diameter of 30nm were obtained, however with a bimodal population composed by a primary peak ranging from 20 to 60nm and a secondary peak (<10%) of about 200nm. A residual chloroform concentration of <20ppm was detected that is in accordance with the International Conference on Harmonization (ICH) guidelines whose limit for this solvent is 60ppm (Grodowska and Parczewski, 2010).

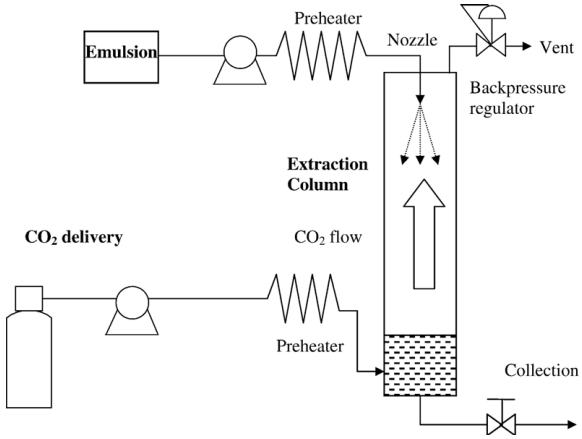

Figure 9. Extraction system used in SFEE process developed by Chattopadhyay *et al.*(Chattopadhyay et al., 2007b).

Earlier, by using of the SFEE plant already cited above (Figure 8), Shekunov *et al.*(Shekunov et al., 2006b) performed micronization studies of cholesterol acetate and griseofulvin and evaluated possible important factors for definition of particle size that can be taken in consideration for SLN production. It was observed that the droplet size, drug concentration and solvent content are the major factors with significant influence on particle size. Naturally, as lower is the size of o/w emulsion droplets, smaller particles can be obtained. Thus the stabilization of the emulsion by using of a surfactant is highly important owing to its capability to guarantee the maintenance of small droplets and avoid aggregation events (Chung et al., 2001). On the other hand, the partial interaction of the drug molecule with the aqueous media may promote the interaction among droplets that aggregates and form larger particles. In addition, considering that supersaturation in emulsion droplets is important for formation of small particles, the elevation of solvent content promotes the

increase on growth rate. These conclusions also correlate with studies conducted with PLGA nanoparticles (Chattopadhyay et al., 2006a).

On the other hand, the partial interaction of the drug molecule with the aqueous media may promote the interaction among droplets that aggregates and form larger particles. In addition, considering that supersaturation in emulsion droplets is important for formation of small particles, the elevation of solvent content promotes the increase on growth rate. These conclusions also correlate with studies conducted with PLGA nanoparticles.

5.3 Supercritical co-injection process

Developed by Calderone and colleagues (Calderone and Rodier, 2006) the co-injection process was presented as a new way for obtention of solid lipid microparticles. As described in Figure 10, firstly, a solid lipid is melted under its normal melting point due to plasticinzing effect exercised by solubilization of a pressurized gas. Second, the expansion of the gas-saturated melted lipid phase causes its pulverization. This pulverization occurs in a custom-designed co-injection device, where particles of uncoated drug are conveyed by a Venturi system at the same time. The co-injection provides the coating of the drug particles (Calderone et al., 2008).

Figure 10. A: Schematic representation of the supercritical co-injection process (1) CO_2 cylinder; (2) cooler; (3) pump; (4) heater; (5) saturation vessel; (6) high pressure vessel; (7) valve; (8) pneumatic conveying; (9) co-injection advice; (10) gas/solid separation filter; (PI) pressure indicator; (PIC) pressure indicator and controller; (TIC) temperature indicator and

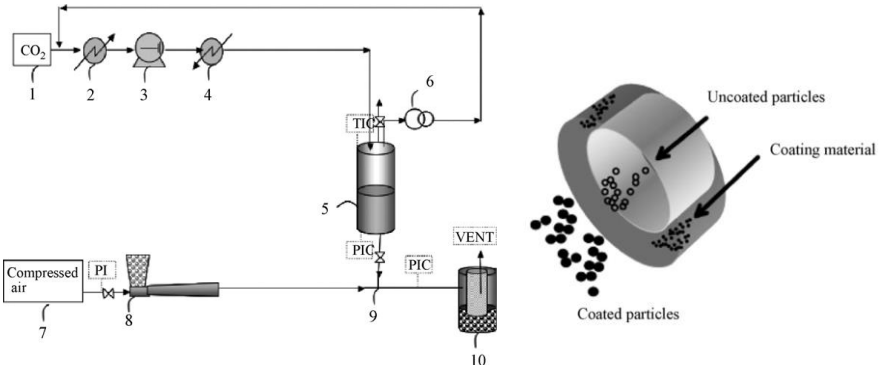

controller; (VENT) Venturi; B: co-injection device (Calderone et al., 2008).

This method presents the advantage of maintaining the active component in a different reservoir of that used for coating material, thus the drug component may be exposed to ambient temperature conditions which avoids its degradation. By using of Precirol® ATO5 for coating pseudoephedrine chlorhydrate (PE) and bovine serum albumin (BSA) the method was tested by Calderone *et al.* (Calderone et al., 2008). It was demonstrated the effective coating of the particles, with significant retarding of

the drug release in aqueous media. Meanwhile, the observed drug release cannot be classified as prolonged cause the relatively short time for release of 100% of entrapped PE (50min) and BSA (30min). In pre-tests carried out with glass beads for validation of this method, it was found that beads smaller than 20µm aggregation events were very common. It brings an important limitation for achieving particles in nanometric scale.

5.4 Particles from gas saturates solutions (PGSS)

Among the available techniques for SLN production by supercritical fluid processing, particles from gas saturated solutions (PGSS) has been shown as the most interesting. Also known as Supercritical Melt Micronization (ScMM) process (Lubary et al., 2011) PGSS is a completely solvent-free process where a solid is melted in a high pressurized vessel pressurized by a compressed gas. Figure 11 demonstrates a generic scheme of a PGSS plant used for drug-loaded polymeric and lipid particles. There gas-saturated solution is expanded through a nozzle and due to Joule-Thompson effect it is rapidly cooled down leading to formation of SLN (Weidner et al., 1995, 2000). In addition to all advantages of supercritical fluid technology, PGSS can produce directly powdered formulations, requires the use of small volume pressurized equipment, demands relatively low amounts of CO_2, easily performs the recovery of the product and the gas, as well as, is useful for the production of polymer powder or the entrapping of active ingredients in polymer matrices. This process already runs in plants with capacity of some hundred kilograms per hour (Cocero et al., 2009; Knez and Weidner, 2001). Other great advantage

of PGSS technique resides on the plasticizing effect of $scCO_2$ when diffused into polymer or lipid matrix which allows their melting under mild temperatures, becoming feasible for drug processing (Alessi et al., 2003). Further, PGSS usually provides particles (µm or nm) with uniform narrow size range of particular interest (Sekhon, 2010b).

However, the mechanisms of particle formation are not completed understood. Several studies have been conducted for modeling of particle formation in PGSS and it was found that expansion process is composed by atomization and nucleation/crystallization phenomena (Li et al., 2005; Strumendo et al., 2007). Briefly, the atomization can be defined as the disruption of a liquid jet in fine particles during expansion (Reitz and Bracco, 1982). Further, the nucleation describes the formation of CO_2 bubbles inside the fresh droplets of the mixture of molten lipid and drug due to transition to gaseous state of the supercritical fluid on expansion unit and the crystallization evolves the solidification of the particle surface and subsequent inner lipid matrix under decrease of temperature due to Joule-Thompson effect (Kappler et al., 2003).

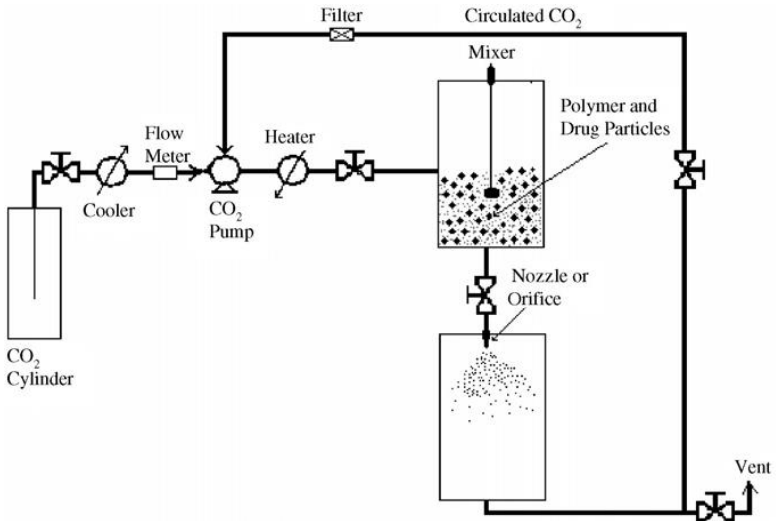

Figure 11. Example of PGSS plant for particle formation for drug-loaded particles (Bahrami and Ranjbarian, 2007).

Studies have demonstrated that nozzle diameter, pre-expansion pressure and temperature and flow rate of carbon dioxide represent four of the most important factors for defining of size, shape and physical state of the particles (Brion et al., 2009). It has been found that as larger is the saturation pressure larger carbon dioxide diffusion is achieved into polymer or lipid matrix, whilst there is an inverse relationship between $scCO_2$ solubilization and saturation temperature (Madzuka and Knez, 2008). The high content of $scCO_2$ favored by high saturation pressure makes the nucleation process occur quicker than crystallization of surface during expansion step leading to formation small particles. However, as higher $scCO_2$ content more violent is the disruption of the lipid matrix with potential formation of shapeless particles. This is not a desirable effect considering that irregular shape particles commonly present a burst release of the active compound (Kappler et al., 2003).

In case of temperature is observed the contrary effect on particle size, i.e., the particle size increases with the increasing temperature above the melting point of the carrier material. This can be explained by the decrease of $scCO_2$ solubility upon increasing temperature. Thus with lower fluid content into the particles, the crystallization of the particle surface occurs faster than CO_2 bubbles formation which lead to retention of the gas and less disruption events resulting in obtention of larger particles. This phenomenon is readily observed when the selected saturation temperature is already below the lipid or polymer melting point (Nalawade et al., 2007). The Figure 12 presents a scheme with different particles obtained with different operation conditions in a work performed by Kappler and colleagues (Kappler et al., 2003).

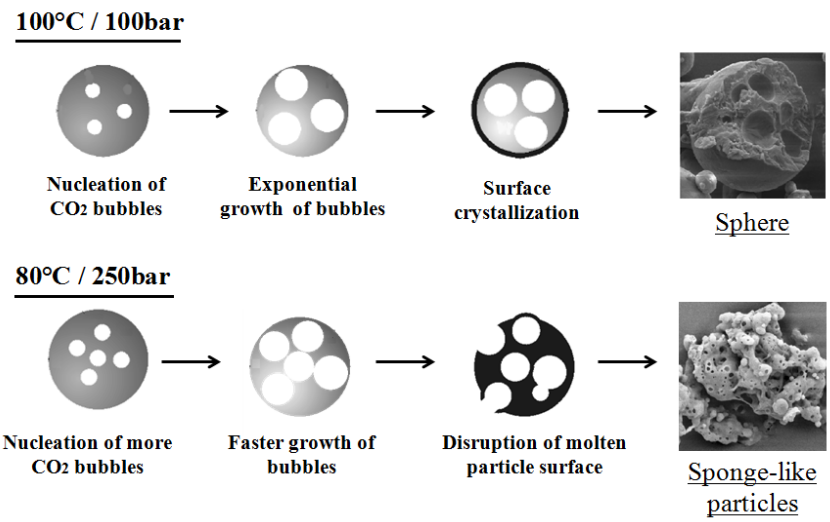

Figure 72. Schematic representation of different results obtained under different operation conditions in a PGSS method for production of PEG-600 particles adapted from Kapler *et al.* (Kappler et al., 2003).

Seeing the wide range of available lipids and drug molecules, the operations conditions are unique depending upon the specific system. Rodrigues *et al.*(Rodrigues et al., 2004a) produced microcomposite lipid particles composed by hydrogenated palm oil entrapping theophylline by PGSS. It was obtained solid lipid particles of about 3µm by selecting of 333K and a range of 12-18MPa for mixing step and a nozzle diameter of 25µm. His group observed that increase on pre-expansion pressure lead to formation of more spherical and larger particles. On the other hand, burst release of theophylline from the particles was detected.

In a similar PGSS plant and the same pre-expansion operation conditions Wang *et al.* (Wang et al., 2008b) achieved trimyristin and tripalmitin particles loading ibuprofen with about 2 µm. However it was used a 100µm diameter nozzle, indicating that the type of lipid and saturation time also have a significant role on particle size definition. Equipped with an 80µm diameter nozzle and under same pre-expansion conditions, the same authors showed less attractive results from lipid particles synthesized with beewax and menthol. A multimodal population of particles ranging from 45 to 180µm was obtained (Zhu et al., 2010b). By application of similar conditions and, Sampaio de Sousa and colleagues (Sampaio de Sousa et al., 2007a) achieved glyceryl monosteareate microparticles loading caffeine with about 5µm. Though, owing to hydrophilicity of caffeine, it was necessary to use water as co-solvent. Further studies under 13MPa and 345K with the addition of Cutina® HR and titanium dioxide, an anticaking additive, on the formulation showed that the low affinity of hydrophilic compounds as caffeine and glutathione resulted in a low payload

and a burst release. Otherwise, a lipophilic compound, ketoprofen, presented a high entrapment rate and sustained release (t_{2h}=20%) (García-González et al., 2010a).

Intending the successful achievement of solid lipid particles in nanometric scale, Bertucco *et al.* (Bertucco et al., 2007) developed a modified PGSS method in which the particle formation is assisted by an auxiliary gas, synthetic air, nitrogen or the combination of both, as depicted in Figure 13. This modification enabled the obtention of submicron-sized lipid particles. Based on this method, at pre-expansion conditions set in 15.0MPa and 313K and a 100 µm nozzle, SLN loaded with insulin or human growth hormone (HGH) were produced with a lipid matrix composed of phosphatidylcholine and tristearin, spherical shape, a mean diameter of 197nm and a mean loading efficiency of 57% and 48% for insulin and HGH respectively (Salmaso et al., 2009a). Taking into account the hydrophilic nature of some bio-active compounds like insulin, HGH and other proteins, DMSO is commonly used to facilitate their homogeneous dispersion on the lipid mixture (Salmaso et al., 2009a; Salmaso et al., 2009b; Vezzù et al., 2010a). The addition of DMSO on formulation promoted an increase in loading efficiency to 80%, with values of residual solvent below 20ppm (Salmaso et al., 2009b). By using of the same saturation conditions, SLN based on tristearin and magnetite nanoparticles (Fe_3O_4) of about 200nm were also produced and the loading capacity was slightly increased with addition of phosphatidylcholine (Vezzù et al., 2009).

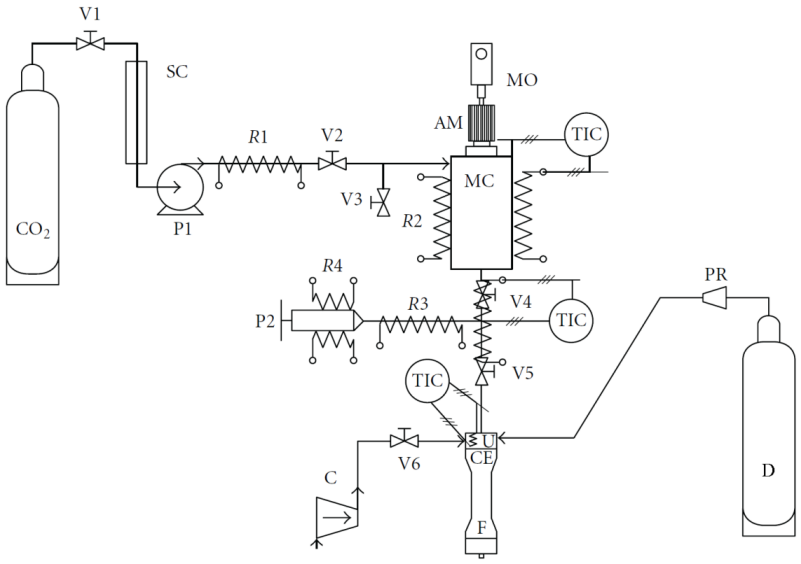

Figure 13. Schematic of the modified PGSS apparatus adapted from Vezzù et al. (Vezzù et al., 2009) - MO, electric motor; AM, stirrer; MC, mixing chamber; U, nozzle; CE, expansion chamber; F, filter; $R_{\#}$., electric resistances; SC, heater exchanger; P1, pump; P2, manual syringe pump; $V_{\#}$., on-off valves; PR, pressure reducer; C, air compressor; D, synthetic air or nitrogen cylinder; TIC, temperature indicator and controller.

The good results obtained by Bertucco and colleagues in entrapping hydrophilic compounds in SLN, with maintaining of a sustained release, reveals the necessity of selecting the correct emulsifier and/or co-solvent. Without them, not only a low encapsulation rate is achieved but during particle formation in the expansion unit a phase separation between the drug and the lipid may occur. This condition favors the deposition of the drug on the particle surface generating a burst release (García-González et al., 2010a).

6. Conclusions

A large quantity of supercritical fluid processes for the production of different drug delivery systems were found in the literature, which can demonstrate that this technology is suitable for the design of lipid micro- and nanoparticles, namely liposomes and solid lipid nanoparticles. Furthermore, it can be seen that the use of supercritical fluid based processes enable more homogenized particles and reduce the environmental impact. Despite the promising features of these techniques, the scalability outside scientific laboratories and industrial implementation of these processes are still expensive, limiting the industrial production of these particles using these fluids.

7. References

Adamo, M., Roberts-Jr., C.T., LeRoith, D., 1998. Insulin and insulin-like growth factor in health and disease. Principles od Medical Biology. 10B, 339-363.

al-Achi, A., Greenwood, R., 1993. Buccal administration of human insulin in streptozocin-diabetic rats. Research Communications in Chemical Pathology and Pharmacology. 82, 297-306.

Alessi, P., Cortesi, A., Kikic, I., Vecchione, F., 2003. Plasticization of polymers with supercritical carbon dioxide: experimental determination of glass-transition temperatures. Journal of Applied Polymer Science. 88, 2189-2193.

Almeida, A.J., Souto, E., 2007. Solid lipid nanoparticles as a drug delivery system for peptides and proteins. Advanced Drug Delivery Reviews. 59, 478-490.

Amidi, M., Mastrobattista, E., Jiskoot, W., Hennink, W.E., 2010. Chitosan-based delivery systems for protein therapeutics and antigens. Advanced Drug Delivery Reviews. 62, 59-82.

Argemi, A., Domingo, C., de Sousa, A.R., Duarte, C.M., Garcia-Gonzalez, C.A., Saurina, J., 2011. Characterization of new topical ketoprofen formulations prepared by drug entrapment in solid lipid matrices. Journal of Pharmaceutical Sciences. 100, 4783-9.

Badens, E., Magnan, C., Charbit, G., 2001. Microparticles of soy lecithin formed by supercritical processes. Biotechnology and Bioengineering. 72, 194-204.

Bahrami, M., Ranjbarian, S., 2007. Production of micro- and nano-composite particles by supercritical carbon dioxide. Journal of Supercritical Fluids. 40, 263-283.

Bangham, A.D., 1963. Physical structure and behavior of lipids and lipid enzymes. Advances in Lipid Research. 1, 65-104.

Barry, J.J.A., Silva, M.M.C.G., Popov, V.K., Shakesheff, K.M., Howdle, S.M., 2006. Supercritical carbon dioxide: putting the fizz into biomaterials. Philosophical Transactions. Series A, Mathematical, Physical, and Engineering Sciences 364, 249-261.

Batzri, S., Korn, E.D., 1973. Single bilayer liposomes prepared without sonication. Biochimica et Biophysica Acta. 298, 1015-1019.

Baudys, M., Uchio, T., Hovgaard, L., Zhu, E.F., Avramoglou, T., Josefowicz, M., Rihová, B., Park, J.Y., Lee, H.K., Kim, S.W., 1995. Glycosylated insulins. Journal of Controlled Release. 36, 151-157.

Beckman, E.J., 2004. Supercritical and near-critical CO_2 in green chemical synthesis and processing. Journal of Supercritical Fluids. 28, 121-191.

Benoit, J.P., Rolland, H., Thies, C., Velde, V.V., 2000. Method of coating particles and coated spherical particles, U.S. Patent, 6087003.

Bertucco, A., Caliceti, P., Elvassore, N., 2007. Process for the production of nano-particles, WIPO Patent, WO 2007/028421 A1.

Brion, M., Jaspart, S., Perrone, L., Piel, G., Evrard, B., 2009. The supercritical micronization of solid dispersion by particles from gas saturated solutions using experimental design. Journal of Supercritical Fluids. 51, 50-56.

Brunner, G., 1994a. Gas extraction, Springer Verlag, New York.

Calderone, M., Rodier, E., 2006. Method for coating powders, World Intellectual Property Organization Patent, 6056791.

Calderone, M., Rodier, E., Lochard, H., Marciacq, F., Fages, J., 2008. A new supercritical co-injection process to coat microparticles. Chemical Engineering and Processing: Process Intensification. 47, 2228-2237.

Campardelli, R., Adami, R., Della Porta, G., Reverchon, E., 2012a. Nanoparticle precipitation by supercritical assisted injection in a liquid antisolvent. Chemical Engineering Journal. 192, 246-251.

Campardelli, R., Della Porta, G., Reverchon, E., 2012b. Solvent elimination from polymer nanoparticle suspensions by continuous supercritical extraction. The Journal of Supercritical Fluids. 70, 100-105.

Cano-Sarabia, M., Ventosa, N., Sala, S., Patiño, C., Arranz, R., Veciana, J., 2008. Preparation of uniform rich cholesterol unilamellar nanovesicles using CO_2-expanded solvents. Langmuir. 24, 2433-2437.

Caputo, G., Adami, R., Reverchon, E., 2010. Analysis of Dissolved-Gas Atomization: Supercritical CO2 Dissolved in Water. Industrial & Engineering Chemistry Research. 49, 9454-9461.

Carino, G.P., Mathiowitz, E., 1999. Oral insulin delivery. Advanced Drug Delivery Reviews. 35, 249-257.

Castor, T.P., 2005. Phospholipid nanosomes. Curr Drug Deliv. 2, 329-40.

Castor, T.P., Chu, L., 7 lug 1998, US5776486 A. Methods and apparatus for making liposomes containing hydrophobic drugs, WO9615774.

Chattopadhyay, P., Huff, R., Shekunov, B.Y., 2006a. Drug encapsulation using supercritical fluid extraction of emulsions. Journal of Pharmaceutical Sciences. 95, 667-679.

Chattopadhyay, P., Shekunov, B., Seitzinger, J., 2006b. Method and apparatus for continuous particle production using supercritical fluid, U. S. Patent, 7083748 B2.

Chattopadhyay, P., Shekunov, B.Y., Yim, D., Cipolla, D., Boyd, B., Farr, S., 2007a. Production of solid lipid nanoparticle suspensions using supercritical fluid extraction of emulsions (SFEE) for pulmonary delivery using the AERx system. Advanced Drug Delivery Reviews. 59, 444-53.

Chattopadhyay, P., Shekunov, B.Y., Yim, D., Cipolla, D., Boyd, B., Farr, S., 2007b. Production of solid lipid nanoparticles suspensions using supercritical fluid extraction of emulsions (SFEE) for pulmonary delivery using the AERx system. Advanced Drug Delivery Reviews. 59, 444-453.

Chien, Y.W., 1996. Human Insulin: Basic science to therapeutic uses. Grud delivery and Industrial Pharmacy. 35, 249-257.

Chono, S., Fukuchi, R., Seki, T., Morimoto, K., 2009. Aerosolized liposomes with dipalmitoyl phosphatidylcholine enhance pulmonary insulin delivery. Journal of Controlled Release. 137, 104-109.

Chung, H., Kim, T., Kwon, I., Jeong, S., 2001. Stability of the oil-in-water type triacylglycerol emulsions. Biotechnology and Bioprocess Engineering. 6, 284-288.

Cocero, M.J., Martín, Á., Mattea, F., Varona, S., 2009. Encapsulation and co-precipitation processes with supercritical fluids: Fundamentals and applications. The Journal of Supercritical Fluids. 47 546–555.

Daar, J., Poliakoff, M., 1999. New directions in inorganic metal-organic coordination chemistry in supercritical fluids. Chemical Reviews. 99, 495 - 541.

Davies, O., Lewis, A., Whitaker, M., Tai, H., Shakesheff, K., Howdle, S., 2008. Applications of supercitical CO_2 in the fabrication of polymer systems for drug delivery and tissue engineering. Advanced Drug Delivery Reviews. 60, 373-387.

De Marco, I., Knauer, O., Cice, F., Braeuer, A., Reverchon, E., 2012. Interactions of phase equilibria, jet fluid dynamics and mass transfer during supercritical antisolvent micronization: The influence of solvents. Chemical Engineering Journal. 203, 71-80.

Degim, I.T., Gümüsel, B., Degim, Z., Özcelikay, T., Tay, A., Güner, S., 2006. Oral administration of liposomal insulin. Journal of Nanoscience and Nanotechnology. 6, 2945-2949.

Della Porta, G.N.F., Reverchon, E., 2011. Continuous supercritical emulsion extraction: a new technology for biopolymer microparticles production. Biotechnology and Bioengineering. 108, 676-686.

Detoni, C.B., Oliveira, D.M., Espirito Santo, I., São Pedro, A., El-Bacha, R., Velozo, E.S., Ferreira, D., Sarmento, B., Cabral-Albuquerque, E.C.M., 2012. Evaluation of thermal-oxidative stability and antiglioma activity of *Zanthoxylum tingoassuiba* essential oil entrapped into multi- and unilamellar liposomes. Journal of Liposome Research. 22, 1-7.

Drulis-Kawa, Z., Dorotkiewicz-Jach, A., 2010. Liposomes as delivery systems for antibiotics. International Journal of Pharmaceutics. 387, 187-198.

Falco, N., Reverchon, E., Della Porta, G., 2012. Continuous Supercritical Emulsions Extraction: Packed Tower Characterization and Application to Poly(lactic-co-glycolic Acid) plus Insulin Microspheres Production. Industrial & Engineering Chemistry Research. 51, 8616-8623.

Foster, N., Mammucari, R., Dehghani, F., Barrett, A., Bezanehtak, K., Coen, E., Combes, G., Meure, L., Ng, A., Regtop, H., Tandya, A., 2003. Processing pharmaceutical compounds using dense gas technology. Industrial & Engineering Chemistry Research. 42, 6476-6493.

Frederiksen, L., Anton, K., Hoogevest, P.v., Keller, H., Leuenberger, H., 1997. Preparation of liposomes encapsulatins water-soluble compounds using supercritical carbon dioxide. Journal of Pharmaceutical Sciences. 86, 921-928.

García-Fuentes, M., Torres, D., Alonso, M.J., 2002. Design of lipid nanoparticles for the oral delivery of hydrophilic macromolecules. Colloids and Surfaces B: Biointerfaces. 27, 159-168.

García-González, C.A., Argemí, A., Sampaio de Sousa, A.R., Duarte, C.M.M., Saurina, J., Domingo, J., 2010a. Encapsulation efficiency of solid lipid hybrid particles prepared using the PGSS® technique and loaded with different polarity active agents. Journal of Supercritical Fluids. 54, 342-347.

García-González, C.A., Argemí, A., Sousa, A.R.S.d., Duarte, C.M.M., Saurina, J., Domingo, C., 2010b. Encapsulation efficiency of solid lipid hybrid particles prepared using the PGSS® technique and loaded with different polarity active agents. The Journal of Supercritical Fluids. 54 342–347.

Gortzi, O., Lalas, S., Chinou, I., Tsaknis, J., 2007. Evaluation of the antimicrobial and antioxidant activities of *Origanum dictamnus* extracts before and after encapsulation in liposomes. Molecules. 12, 932-945.

Grodowska, K., Parczewski, A., 2010. Organic solvents in the pharmaceutical industry. Acta Poloniae Pharmaceutica - Drug Research. 67, 3-12.

Haga, M., Saito, K., Shimaya, T., Maezawa, Y., Kato, Y., Kim, S.W., 1990. Hypoglycemic effect of intestinally administred monosaccharide-modified insulin derivatives in rats. Chemical & Pharmaceutical Bulletin. 38, 1983-1986.

Hari, P.R., Chandy, T., Sharma, C.P., 1996. Chitosan/calcium-alginate beads for oral delivery of insulin. Journal of Applied Polymer Science. 59, 1795-1801.

Hashimoto, T., Nomoto, M., Komatsu, K., Haga, M., Hayashi, M., 2000. Improvement of intestinal absorption of peptides: adsorption of B1-Phe monoglucosylated insulin to rat intestinal brush-border membrane vesicles. European Journal of Pharmaceutics and Biopharmaceutics. 50, 197-204.

Hejazi, R., Amiji, M., 2003. Chitosan-based gastrointestinal delivery systems. Journal of Controlled Release. 89, 151-165.

Huang, Y.-Y., Wang, C.-H., 2006. Pulmonary delivery of insulin by liposomal carriers. Journal of Controlled Release. 113, 9-14.

Ibrahim, M.A., Ismail, A., Fetouh, M.I., Göpferich, A., 2005. Stability of insulin during the erosion of poly(lactic acid) and poly(lactic-co-glycolic acid) microspheres. Journal of Controlled Release. 106, 241-252.

Imura, T., Gotoh, T., Otake, K., Yoda, S., Takebayashi, Y., Yokoyama, S., Takebayashi, H., Sakai, H., Yuasa, M., Abe, M., 2003. Control of physicochemical properties of liposomes using a supercritical reverse phase evaporation method. Langmuir. 19, 2021-2025.

Imura, T., Otake, K., Hashimoto, S., Gotoh, T., Yuasa, M., Yokoyama, S., Sakai, H., Rathman, J.F., Abe, M., 2002. Preparation and physicochemical properties of various soybean lecithin liposomes using supercritical reverse phase evaporation method. Colloids and Surfaces B: Biointerfaces. 27, 133-140.

Iwanaga, K., Ono, S., Narioka, K., Kakemi, M., Morimoto, K., Yamashita, S., Namba, Y., Oku, N., 1999. Application of surface-coated liposomes for oral delivery of peptide: effects of coating the liposome's surface on the GI transit of insulin. Journal of Pharmaceutical Sciences. 88, 248-252.

Jain, A.K., Chalasani, K.B., Khar, R.K., Ahmed, F.J., Diwan, P.V., 2007. Muco-adhesive multivesicular liposomes as an effective carrier for transmucosal insulin delivery. Journal of Drug Targeting. 15, 417-427.

Jederstrom, G., Andersson, A., Gråsjö, J., Sjöholm, I., 2004. Formulating insulin for oral administration: preparation of hyaluronan-insulin complex. Pharmaceutical Research. 21, 2040-2047.

Jones, M.N., 1995. The surface properties of phospholid liposome systems and their characterisation. Advances in Colloid and Interface Science. 54, 93-128.

Jorgensen, L., Moeller, E.H., Weert, M.v.d., Nielsen, H.M., Frokjaer, S., 2006. Preparing and evaluating delivery systems for proteins. European Journal of Pharmaceutical Sciences. 29, 174-182.

Joshi, M.D., Müller, R.H., 2009. Lipid nanoparticles for parenteral delivery of actives. European Journal of Pharmaceutics and Biopharmaceutics. 71, 161-172.

Justo, O.R., Moraes, A.M., 2011. Analysis of process parameters on the characteristics of liposomes prepared by ethanol injection with a view to

process scale-up: effect of temperature and batch volume. Chemical Engineering Research and Design. 89, 785-792.

Kadimi, U.S., Balasubramanian, D.R., Ganni, U.R., Balaraman, M., Govindaraiulu, V., 2007. In vitro studies on liposomal amphotericin B obtained by supercritical carbon dioxide-mediated process. Nanomedicine: Nanotechnology, Biology and Medicine. 3, 273-280.

Karathanasis, E., Bhavane, R., Annapragada, A.V., 2006. Triggered release of inhaled insulin from tje agglomerated vesicles: pharmacodynamic studies in rats. Journal of Controlled Release. 113, 117-127.

Khafagy, E.-S., Morishita, M., Onuki, Y., Takayama, K., 2007. Current challenges in non-invasive insulin delivery systems: a comparative review. Advanced Drug Delivery Reviews. 59, 1521-1546.

Kim, C.-K., Jeong, E.J., 1995. Development of dried liposome as effective immuno-adjuvant for hepatitis B surface antigen. International Journal of Pharmaceutics. 115, 193-199.

Kisel, M.A., Kulik, L.N., Tsybovsky, I.S., Vlasov, A.P., Vorob'yov, M.S., Kholodova, E.A., Zabarovskaya, Z.V., 2001. Liposomes with phosphatidylethanol as a carrier for oral delivery of insulin: studies in the rat. International Journal of Pharmaceutics. 216, 105-114.

Knez, Ž., Weidner, E., 2001. 9.8 Preciptation of solids with dense gases, in: A. Bertucco and G. Vetter (Eds.), Industrial Chemistry Library. Elsevier, pp. 587-611.

Kompella, U.B., Koushik, K., 2001. Preparation of drug delivery systems using supercritical fluid technology. Critical Reviews in Therapeutic Drug Carrier Systems. 18, 173-199.

Könner, A.C., Klöckener, T., Brüning, J.C., 2009. Control of energy homeostasis by insulin and leptin: targeting the arcuate nucleus and beyond. Physiology & Behavior. 97, 632-638.

Kreuter, J., 1996. Nanoparticles and microparticles for drug and vaccine delivery. Journal of Anatomy. 189, 503-505.

Kunastitchai, S., Pichert, L., Sarisuta, N., Müller, B.W., 2006. Application of aerosol solvent extraction system (ASES) process for preparation of liposomes in a dry and reconstitutable form. International Journal of Pharmaceutics. 316, 93-101.

Lane, E.M., O'Driscoll, C.M., Corrigan, O.I., 2005. Quantitative estimation of the effects of bile salts surfactants systems on insulin stability and permeability in the rat intestine using a mass balance model. Journal of Pharmacy and Pharmacology. 57, 169-175.

Lesoin, L., Boutin, O., Crampon, C., Badens, E., 2011a. CO_2/water/surfactant ternary systems and liposome formation using supercritical CO_2: a review. Colloids and Surfaces A: Physicochemical and Engineering Aspects. 377, 1-14.

Lesoin, L., Crampon, C., Boutin, O., Badens, E., 2011b. Development of a continuous dense gas process for the production of liposomes. Journal of Supercritical Fluids. 60, 51-62.

Lesoin, L., Crampon, C., Boutin, O., Badens, E., 2011c. Preparation of liposomes using the supercritical anti-solvent (SAS) process and comparison with a conventional method. Journal of Supercritical Fluids. 57, 162-174.

Lesoin, L., Crampon, C., Boutin, O., Badens, E., 2011d. Preparation of liposomes using the supercritical anti-solvent (SAS) process and comparison with a conventional method. Journal of Supercritical Fluids. 57, 162-174.

Li, J., Rodrigues, M., Paiva, A., Matos, H.A., Azevedo, E.G.d., 2005. Modeling of the PGSS process by cristallization and atomization. AIChE Journal. 51, 2343-2357.

Li, Y., Yang, D.-J., Chen, S.-L., Chen, S.-B., Chan, A.S.-C., 2008a. Comparative physicochemical characterization of phospholipids complex of puerarin formulated by conventional and supercritical methods. Pharmaceutical Research. 25, 563-577.

Li, Y., Yang, D.-J., Chen, S.-L., Chen, S.-B., Chan, A.S.-C., 2008b. Process parameters and morphology in puerarin, phospholipids and their complex microparticles generation by supercritical antisolvent precipitation. International Journal of Pharmaceutics. 359, 35-45.

Liu, J., Gong, T., Fu, H., Wang, C., Wang, X., Chen, Q., Zhang, Q., He, Q., Zhang, Z., 2008. Solid lipid nanoparticles for pulmonary delivery of insulin. International Journal of Pharmaceutics. 356, 333-344.

Lubary, M., de Loos, T.W., ter Horst, J.H., Hofland, G.W., 2011. Production of microparticles from milk fat products using the Supercritical Melt Micronization (ScMM) process. The Journal of Supercritical Fluids. 55, 1079-1088.

Lueβen, H.L., Rentel, C.-O., Kotzé, A.F., Lehr, C.-M., Boer, A.G.d., Verhoef, J.C., Junginger, H.E., 1997. Mucoadhesive polymers in peroral peptide drug

delivery. IV. Polycarbophil and chitosan are potent enhancers of peptide transport across intestinal mucosae *in vitro*. Journal of Controlled Release. 45,

Madzuka, Z., Knez, Z., 2008. Influence of temperature and pressure during PGSS[TM] micronization and storage time on degree of crystallinity and crystal forms of monostearate and triearate. Journal of Supercritical Fluids. 45, 102-111.

Magnan, C., Badens, E., Commenges, N., Charbit, G., 2000. Soy lecithin micronization by preciptation with a complesses fluid antisolvent - influence of process parameters. journal of supercritical ruins. 19, 69-77.

Manosroi, A., Chutoprapat, R., Abe, M., Manosroi, J., 2008. Characteristics of niosomes prepared by supercritical carbon dioxide ($scCO_2$) fluid. International Journal of Pharmaceutics. 352, 248-255.

Manosroi, A., Ruksiriwanich, W., Abe, M., Sakai, H., Manosroi, W., Manosroi, J., 2010. Biological activities of the rice bran extract and physical characteristics of its entrapment in niosomes by supercritical carbon dioxide fluid. Journal of Supercritical Fluids. 54, 137-144.

Marschütz, M.K., Bernkop-Schnürch, A., 2000. Oral peptide drug delivery: polymer-inhibitor conjugates protecting insulin from enzymatic degradation *in vitro*. Biomaterials. 21, 1499-1507.

Martín, A., Cocero, M.J., 2008. Micronization processes with supercritical fluids: fundamentals ans mechanisms. Advanced Drug Delivery Reviews. 60,

Martins, S., Sarmento, B., Ferreira, D.C., Souto, E.B., 2007. Lipid-based colloidal carriers for peptide and protein delivery - liposomes versus lipid nanoparticles. International Journal of Nanomedicine. 2, 595-607.

Massing, U., Cicko, S., Ziroli, V., 2008. Dual asymmetric centrifugation (DAC) - a new technique for liposome preparation. Journal of Controlled Release. 125, 16-24.

Mehnert, W., Mäder, K., 2001. Solid lipid nanoparticles: production, characterization and applications. Advanced Drug Delivery Reviews. 47, 165-196.

Meure, L.A., Foster, N.R., Dehghani, F., 2008. Conventional and dense gas techniques for the production of liposomes: a review. AAPS PharmSciTech. 9, 798-809.

Meure, L.A., Knott, R., Foster, N.R., Dehgani, F., 2009. The depressurizationof an expanded solution into aqueous media for the bulk production of liposomes. Langmuir. 25, 326-337.

Meyts, P.d., 1994. The structural basis of insulin and insulin-like growth factor-I receptor binding and negative co-operativity, and its relevance to mitogenic versus metabolic signalling. Diabetologia. 37 Suppl 2, S135-S148.

Mitra, R., Pezron, I., Li, Y., Mitra, A.K., 2001. Enhanced pulmonary delivery of insulin by lung lavage fluid and phospholipids. International Journal of Pharmaceutics. 217, 25-31.

Mohanraj, V.J., Barnes, T.J., Prestidge, C.A., 2010. Silica nanoparticle coated liposomes: a new type of hybrid nanocapsule for proteins. International Journal of Pharmaceutics. 392, 285-293.

Morishita, M., Kajita, M., Suzuki, A., Takayama, K., Chiba, Y., Tokiwa, S., Nagai, T., 2000. The dose-related hypoglycemic effects of insulin emulsions incorporating highly purified EPA and DHA. International Journal of Pharmaceutics. 201, 175-185.

Morishita, M., Matsuzawa, A., Takayama, K., Isowa, K., Nagai, T., 1998. Improvement insulin enteral absorption using water-in-oil-in-water emulsion. International Journal of Pharmaceutics. 172, 189-198.

Mukherjee, S., Ray, S., Thakur, R.S., 2009. Solid lipid nanoparticles: a modern formulation approach in drug delivery system. Indian Journal of Pharmaceutical Sciences. 71, 349-58.

Müller, R.H., Mäder, K., Gohla, S., 2000. Solid lipid nanoparticles (SLN) for controlled drug delivery - a review of the state of the art. European Journal of Pharmaceutical Sciences. 50, 161-177.

Naik, S., Patel, D., Surti, N., Misra, A., 2010. Preparation of PEGylated liposomes of docetaxel using supercritical fluid technology. Journal of Supercritical Fluids. 54, 110-119.

Nalawade, S.P., Picchioni, F., Janssen, L.P.B.M., 2006. Supercritical carbon dioxide as a green solvent for processing polymer melts: processing aspects and applications. Progress in Polymer Science. 31, 19-43.

Nalawade, S.P., Picchioni, F., Janssen, L.P.B.M., 2007. Batch production of micron size particles from poly(ethylene glycol) using supercritical CO_2 as a processing solvent. Chemical Engineering Science. 62, 1712-1720.

Nishikawa, K., Ayusawa, A., Morita, T., 2004. Density fluctuation of supercritical fluids obtained from small-angle X-ray scattering experiment and thermodynamic calculation. Journal of Supercritical Fluids. 30, 249-257.

Nishikawa, K., Morita, T., 1998. Fluid behavior at supercritical states studied by small-angle X-ray scattering. Journal of Supercritical Fluids. 13, 143-148.

Nishikawa, K., Morita, T., 2000. Inhomogeneity of molecular distribution in supercritical fluids. Chemical Physics Letters. 316, 238-242.

Obeidat, W.M., 2009. Recent patents review in microencapsulation of pharmaceuticals using the emulsion solvent removal methods. Recent Patents on Drug Delivery & Formulation. 3, 178-192.

Otake, K., Imura, T., Sakai, H., Abe, M., 2001. Development of a new preparation method of liposomes using supercritical carbon dioxide. Langmuir. 17, 3898-3901.

Otake, K., Shimomura, T., Goto, T., Imura, T., Furuya, T., Yoda, S., Takebayashi, Y., Sakai, H., Abe, M., 2006a. One-step preparation of chitosan-coated cationic liposomes by an improved supercritical reverse-phase evaporation method. Langmuir. 22, 4054-4059.

Otake, K., Shimomura, T., Goto, T., Imura, T., Furuya, T., Yoda, S., Takebayashi, Y., Sakai, H., Abe, M., 2006b. Preparation of liposomes using an improved supercritical reverse phase evaporation method. Langmuir. 22, 2543-2550.

Pan, Y., Zheng, J.-M., Zhao, H.Y., Li, Y.-J., Xu, H., Wei, G., 2002. Relantioship between drug effects and particle size of insulin-loaded bioadhesive microsphere. Acta Pharmacologica Sinica. 23, 1051-1056.

Pasquali, I., Bettini, R., 2008. Are pharmaceuticals really going supercritical? International Journal of Pharmaceutics. 364, 176-187.

Patel, H., Ryman, B., 1976. Oral administration of insulin by encapsulation within liposomes. FEBS Letters. 62, 60-63.

Puri, A., Loomis, K., Smith, B., Lee, J.-H., Yavlovich, A., Heldman, E., Blumenthal, R., 2009. Lipid-based nanoparticles as pharmaceutical drug carriers: from concepts to clinic. Critical Reviews in Therapeutic Drug Carrier Systems. 26, 523-580.

Ramkissoon-Ganorkar, C., Liu, F., Baudys, M., Kim, S.W., 1999. Modulating insulin-release profile from pH/thermosensitive polymeric beads through polymer molecular weight. Journal of Controlled Release. 59, 287-298.

Reitz, R.D., Bracco, F.V., 1982. Mechanism of atomization of a liquid jet. Physics of Fluids. 25, 1730-1742.

Reverchon, E., Adami, R., 2006. Nanomaterials and supercritical fluids. Journal of Supercritical Fluids. 37, 1-22.

Reverchon, E., Adami, R., Cardea, S., Della Porta, G., 2009a. Supercritical fluids processing of polymers for pharmaceutical and medical applications. Journal of Supercritical Fluids. 47, 484-492.

Reverchon, E., Adami, R., Cardea, S., Porta, G.D., 2009b. Supercritical fluids processing of polymers for pharmaceutical and medical applications. Journal of Supercritical Fluids. 47, 484-492.

Reverchon, E., Cardea, S., Schiavo Rappo, E., 2008. Membranes formation of a hydrosoluble biopolymer (PVA) using a supercritical CO2-expanded liquid. Journal of Supercritical Fluids. 45, 356-364.

Reverchon, E., Della Porta, G., 2003. Micronization of antibiotics by supercritical assited atomization. Journal of Supercritical Fluids. 26, 243-252.

Ribeiro dos Santos, I., Richard, J., Pech, B., Benoit, J.P., 2002a. Microencapsulation of protein particles within lipids using a novel supercritical fluid process. International Journal of Pharmaceutics. 242, 69-78.

Ribeiro Dos Santos, I., Richard, J., Pech, B., Thies, C., Benoit, J.P., 2002b. Microencapsulation of protein particles within lipids using a novel supercritical fluid process. International Journal of Pharmaceutics. 242, 69-78.

Ribeiro dos Santos, I., Richard, J., Thies, C., Pech, B., Benoit, J.P., 2003a. A supercritical fluid-based coating technology. 3: preparation and chatacterization of bovine serum albumin particles coated with lipids. Journal of Microencapsulation. 20, 110-128.

Ribeiro dos Santos, I., Thies, C., Richard, J., Meurlay, D.L., Gajan, V., VandeVelde, V., Benoit, J.P., 2003b. A supercritical fluid-based coating technology. 2: solubility considerations. Journal of Microencapsulation. 20, 97-109.

Rieux, A.d., Fievez, V., Garinot, M., Schneider, Y.-J., Préat, V., 2006. Nanoparticles as potential oral delivery systems of proteins and vaccines: a mechanistic approach. Journal of Controlled Release. 116, 1-27.

Rodrigues, M., Peiriço, N., Matos, H., Azevedo, E.G.d., Lobato, M.R., Almeida, A.J., 2004a. Microcomposites theophylline/hydrogenated palm oil from a PGSS process for controlled drug delivery systems. Journal of Supercritical Fluids. 29, 175-184.

Rodrigues, M., Peiriço, N., Matos, H., Gomes de Azevedo, E., Lobato, M.R., Almeida, A.J., 2004b. Microcomposites theophylline/hydrogenated palm oil from a PGSS process for controlled drug delivery systems. The Journal of Supercritical Fluids. 29, 175-184.

Saffran, M., Kumar, G.S., Savarian, C., Burham, J.C., Williams, F., Neckers, D.C., 1986. A new approach to the oral administration of insulin and other peptide drugs. Science. 233, 1081-1084.

Saffran, M., Pansky, B., Budd, G., Williams, F., 1997. Insulin and the gastrointestinal tract. Journal of Controlled Release. 46, 89-98.

Salamat-Miller, N., Johnston, T.P., 2005. Current strategies to enhance the paracellular transport of therapeutic polypeptides across the intestinal epithelium. International Journal of Pharmaceutics. 294, 201-216.

Salmaso, S., Bersani, S., Elvassore, N., Bertucco, A., Caliceti, P., 2009a. Biopharmaceutical characterisation of insulin and recombinant human growth hormone loaded lipid submicron particles produced by supercritical gas micro-atomisation. International Journal of Pharmaceutics. 379, 51-58.

Salmaso, S., Elvassore, N., Bertucco, A., Caliceti, P., 2009b. Production of solid lipid submicron particles for protein delivery using a novel supercritical gas-assisted melting atomization process. Journal of Pharmaceutical Sciences. 98, 640-650.

Sampaio de Sousa, A.R., Silva, R., Tay, F.H., Simplício, A.L., Kazarian, S.G., Duarte, C.M.M., 2009. Solubility enhancement of trans-chalcone using lipid carriers and supercritical CO2 processing. The Journal of Supercritical Fluids. 48, 120-125.

Sampaio de Sousa, A.R., Simplício, A.L., de Sousa, H.C., Duarte, C.M.M., 2007a. Preparation of glycerol monostearate-based particles by PGSS®-Application to caffeine. Journal of Supercritical Fluids. 43, 120-125.

Sampaio de Sousa, A.R., Simplício, A.L., de Sousa, H.C., Duarte, C.M.M., 2007b. Preparation of glyceryl monostearate-based particles by PGSS®--Application to caffeine. The Journal of Supercritical Fluids. 43, 120-125.

Santos, N.C., Castanho, M.A.R.B., 2002. Lipossomas: a bala mágica acertou? Química Nova. 25, 1181-1185.

Sarmento, B., Martins, S., Ferreira, D., Souto, E.B., 2007. Oral insulin delivery by means of solid lipid nanoparticles. International Journal of Nanomedicine. 2, 743-749.

Secuianu, C., Feroiu, V., Geana, D., 2008. Phase behavior for carbon dioxide + ethanol system: experimental measurements and modeling with a cubic equation of state. Journal of Supercritical Fluids. 47, 109-116.

Sekhon, B.S., 2010a. Supercritical fluid technology: an overview of pharmaceutica applications. International Journal of PharmTech Research. 2, 810-826.

Sekhon, B.S., 2010b. Supercritical Fluid Technology: An Overview of Pharmaceutical Applications. International Journal of PharmTech Research. 2, 810-826.

Severino, P., Andreani, T., Macedo, A.S., Fangueiro, J.F., Santana, M.H., Silva, A.M., Souto, E.B., 2012. Current State-of-Art and New Trends on Lipid Nanoparticles (SLN and NLC) for Oral Drug Delivery. Journal of Drug Delivery. 2012, 750891.

Shaji, J., Patole, V., 2008. Protein and peptide drug delivery: oral approaches. Indian Journal of Pharmaceutical Sciences. 70, 269-277.

Sharma, A., Sharma, U., 1997. Liposomes in drug delivery: progress and limitations. International Journal of Pharmaceutics. 154, 123-140.

Shekunov, B.Y., Chattopadhyay, P., Seitzinger, J., 2006a. Engineering of composite particles for drug delivery using supercritical fluid technology, in: S. Svenson (Eds.), Polymeric Drug Delivery II. ACS Division of Polymeric Materials: Science and Engineering Inc., pp. 234-249.

Shekunov, B.Y., Chattopadhyay, P., Seitzinger, J., Huff, R., 2006b. Nanoparticles of poorly water-soluble drugs prepared by supercritical fluid extraction of emulsions. Pharmaceutical Research. 23, 196-204.

Shoyele, S., Cawthorne, S., 2006. Particles engineering techniques for inhaled biopharmaceuticals. Advanced Drug Delivery Reviews. 58, 1009-1029.

Silva, C., Ribeiro, A., Ferreira, D., Veiga, F., 2003. Administração oral de peptídios e proteínas: III. Aplicação à insulina. Revista Brasileira de Ciências Farmacêuticas. 39, 21-40.

Skoza, F., Papahadjopoulos, D., 1980. Comparative properties and methods of preparation of lipid vesicles (liposomes). Annual Reviews of Biophysics and Bioengeneering. 9, 467-508.

Storm, G., Crommelin, D.J.A., 1998. Liposomes: quo vadis? Pharmaceutical Science & Technology Today. 1, 19-31.

Strumendo, M., Bertucco, A., Elvassore, N., 2007. Modeling of particle formation processes using gas saturated solution atomization. Journal of Supercritical Fluids. 41, 115-125.

Takeuchi, H., Matsui, Y., Yamamoto, H., Kawashima, Y., 2003. Mucoadhesive properties of carbopol or chitosan-coated liposomes and their effectiveness in the oral adminstration of calcitonin to rats. Journal of Controlled Release. 86, 235-242.

Takeuchi, H., Yamamoto, H., Niwa, T., Hino, T., Kawashima, Y., 1996. Enteral absorption of insulin in rats from mucoadhesive chitosan-coated liposomes. Pharmaceutical Research. 13, 896-901.

Thies, C., Ribeiro dos Santos, I., Richard, J., VandeVelde, V., Rolland, H., Benoit, J.P., 2003. A supercritical fluid-based coating technology. 1: process considerations. Journal of Microencapsulation. 20, 87-96.

Trotta, M., Cavalli, R., Carlotti, M.E., Battaglia, L., Debernardi, F., 2005. Solid lipid micro-particles carrying insulin formed by solvent-in-water emulsion-diffusion technique. International Journal of Pharmaceutics. 288, 281-288.

Ulrich, A.S., 2002. Biophysical aspects of using liposomes as delivery vehicles. Biosci Rep. 22, 129-50.

Vezzù, K., Borin, D., Bertucco, A., Bersani, S., Salmaso, S., Caliceti, P., 2010a. Production of lipid microparticles containing bioactive molecules functionalized with PEG. Journal of Supercritical Fluids. 54, 328-334.

Vezzù, K., Borin, D., Bertucco, A., Bersani, S., Salmaso, S., Caliceti, P., 2010b. Production of lipid microparticles containing bioactive molecules functionalized with PEG. The Journal of Supercritical Fluids. 54, 328-334.

Vezzù, K., Campolmi, C., Bertucco, A., 2009. Production of Lipid Microparticles Magnetically Active by a Supercritical Fluid-Based Process. International Journal of Chemical Engineering. 2009, 1-9.

Wang, T., Deng, Y., Geng, Y., Gao, Z., Zou, J., Wang, Z., 2006. Preparation of submicron unilamellar liposomes by freeze-drying double emulsions. Biochimica et Biophysica Acta. 1758, 222-231.

Wang, X., Chen, H., Guo, Y., Su, Y., Wang, H., Li, J., 2008a. Preparation of ibuprofen/lipid composite microparticles by supercritical fluid technique. Frontiers of Chemical Engineering in China 2, 361–367.

Wang, X., Chen, H., Guo, Y., Su, Y., Wang, H., Li, J., 2008b. Preparation of ibuprofen/lipid composite microparticles by supercritical fluid technique. Frontiers of Chemical Engineering in China. 2, 361-367.

Weidner, E., Knez, Ž., Novak, Z., 1995. Process for preparing particles of powders, European Patent, 744922.

Weidner, E., Knez, Ž., Novak, Z., 2000. Process for preparing particles of powders, U.S. Patent, 6056791.

Wen, Z., Liu, B., Zheng, Z., You, X., Pu, Y., Li, Q., 2010. Preparation of liposomes entrapping essential oil from *Atractylodes macrocephala* Koidz by modified RESS technique. Chemical Engineering Research and Design. 88, 1102-1107.

Wissing, S.A., Kayser, O., Müller, R.H., 2004. Solid lipid nanoparticles for parenteral drug delivery. Advanced Drug Delivery Reviews. 56, 1257-1272.

Woods, S.C., Jr., D.P., Bobbioni, E., Ionescu, E., Sauter, J.-F., Rohner-Jeanrenaud, F., Jeanrenaud, N., 1985. Insulin: its relationship to the central nervous system and to the control of food intake and body weight. The American Journal of Clinical Nutrition. 42, 1063-1071.

Wu, Z.H., Ping, Q.N., Song, Y.M., Lei, X.M., Li, J.Y., Cai, P., 2004. Studies on the insulin-liposomes double-coated by chitosan and chitosan EDTA conjugates. Acta Pharmaceutica Sinica. 39, 933-938.

Xia, F., Hu, D., Jin, H., Zhao, Y., Liang, J., 2012. Preparation of lutein proliposomes by supercritical anti-solvent technique. Food Hydrocolloids. 26, 456-463.

Xia, F., Jin, H., Zhao, Y., Guo, X., 2011. Supercritical antisolvent-based technology for preparation of vitamin D_3 proliposome and its characteristics. Chinese Journal of Chemical Engineering. 19, 1039-1046.

Xu, H.-N., He, C.-H., 2007. Extraction of isoflavones from stem of *Pueraria lobata (Willd.)* Ohwi using *n*-butanol/water two-phase solvent system and separation of daidzein. Separation and Purification Technology. 56, 85-89.

Yamaguchi, Y., Takenaga, M., Kitagawa, A., Ogawa, Y., Mizushima, Y., Igarashi, R., 2002. Insulin-loaded biodegradable PLGA microcapsules: initial burst release controlled by hydrophilic additives. Journal of Controlled Release. 81, 235-249.

Yamamoto, A., Taniguchi, T., Rikyuu, K., Tsuji, T., Fujita, T., Murakami, M., Muranishi, S., 1994. Effect of various protease inhibitors on the intestinal absorption and degradation of insulin in rats. Pharmaceutical Research. 11, 1496-1500.

Yang, T.-Z., Wang, X.-T., Yan, X.-Y., Zhang, Q., 2002. Phospholipid deformable vesicles for buccal delivery of insulin. Chemical & Pharmaceutical Bulletin. 50, 749-753.

Yeo, S.-D., Kiran, E., 2005. Formation of polymer particles with supercritical fluids: a review. Journal of Supercritical Fluids. 34, 287-308.

Zhang, N., Ping, Q.N., Huang, G.H., Xu, W.F., 2005. Investigation of lectin-modified insulin liposomes as carriers for oral administration. International Journal of Pharmaceutics. 294, 247-259.

Zhang, Y., Wei, W., Lv, P., Wang, L., Ma, G., 2011. Preparation and evaluation of alginate-chitosan microspheres for oral delivery of insulin. European Journal of Pharmaceutics and Biopharmaceutics. 77, 11-19.

Zhu, L., Lan, H., He, B., Hong, W., Li, J., 2010a. Encapsulation of Menthol in Beeswax by a Supercritical Fluid Technique. International Journal of Chemical Engineering. 2010, 1-7.

Zhu, L., Lan, H., He, B., Hong, W., Li, J., 2010b. Encapsulation of menthol in beeswax by supercritical fluid technique. International Journal of Chemical Engineering. 2010, 1-7.

Zimmermann, E., Müller, R.H., 2001. Electrolyte and pH-stabilities of aqueous solid lipid nanoparticles (SLN^{TM}) dispersions in artificial gastrointestinal media. European Journal of Pharmaceutical Sciences. 52, 203-210.

Attachment II - Publication list

Proceedings of Conference

Costa, G.M.N.; Matos, R.L.; Pereira, V.J.; Santana, G.L.; Espirito Santo, I.; Nascimento, I.B.S.; Cabral-Albuquerque, E.C.M.; Vieira de Melo, S.A.B. Monitoring pharmaceutical solubility in the binary solvent/antisolvent for SAS process using Peng-Robinson equation of state.13th European Meeting on Supercritical Fluids, The Hague, 2011.

Espirito Santo, I.; Campardelli, R.; Cabral Albuquerque, E.; Vieira de Melo, S.A.B; Della Porta, G.; Reverchon, E. Liposomes production by etanol injection assisted by supercritical CO_2 and solvente elimination. 13th International Symposium on Supercritical Fluids, San Francisco, 2012.

Ferraz, L.R.C.; Nedia, R.G.; Espirito Santo, I.; Cabral Albuquerque, E.; Fialho, R.; Costa, G.M. Phase equilibrium of different phospholipids in supercritical CO2 with ethanol as a co-solvent. 2012 AIChE Annual Meeting, Pittsburg, 2012.